## NOZZLE LIST ⚠

| MARK | NB | DESIGNATION | STAND OUT | PIPES/NECKS ND/BD | PIPES/NECKS THK/SCH | FLANGES TYPE | FLANGES RAT. | FLANGES FACE | REINF. THK. | REINF. WIDTH | NOTE |
|---|---|---|---|---|---|---|---|---|---|---|---|
| A1 | 1 | SHELL INLET | 540 | 10" | – /60 | W.N. | 150 | R.F. | 10 | 50 | (6) |
| S1 | 1 | CONDENSATE OUTLET | 520 | 4" | – /120 | W.N. | 150 | R.F. | – | – | (6) |
| E1 | 1 | SHELL VENT | 470 | 3" | – /160 | W.N. | 150 | R.F. | – | – | (6) |
| A2 | 1 | CHANNEL INLET | 520 | 4" | – /120 | W.N. | 150 | R.F. | – | – | (6) |
| S2 | 1 | CHANNEL OUTLET | 520 | 4" | – /120 | W.N. | 150 | R.F. | – | – | (6) |
| E2 | 1 | CHANNEL VENT | 470 | 2" | – /160 | W.N. | 150 | R.F. | – | – | (6,22,24) |
| D2 | 1 | CHANNEL DRAIN | 470 | 2" | – /160 | W.N. | 150 | R.F. | – | – | (6,22,24) |

| MARK | DESIGNATION | DN | RATING | LOCATED ON |
|---|---|---|---|---|
| PI | PRESSURE CONNECTION | 3/4" NPT | 6000 # | NOZZLES A1–S1–A2–S2 |
| TI | TEMPERATURE CONNECTION | 1" NPT | 6000 # | NOZZLES A1–S1–A2–S2 |

## REFERENCE STANDARD DRAWINGS

| | NUMBER | DESIGNATION |
|---|---|---|
| ☒ | 1705–41–ST–ENG–901–03 | MANUFACTURER NAME PLATE |
| ☒ | 1705–41–ST–ENG–901–04 | NAME PLATES MOUNTING BRACKET |
| ☒ | 1705–41–ST–ENG–901–06 | PROJECTION OF NOZZLES |
| ☐ | 1705–41–ST–ENG–901–13 | HOT INSULATION SUPPORTS (VERTICAL VESSEL) |
| ☒ | 1705–41–ST–ENG–901–14 | HOT INSULATION SUPPORTS (HORIZONTAL VESSEL) |
| ☐ | 1705–41–ST–ENG–901–16 | COLD INSULATION SUPPORTS |
| ☒ | 1705–41–ST–ENG–901–17 | EARTH CONNECTION |
| ☒ | 1705–41–ST–ENG–901–22 | SCHEDULE – CS/SS/CLAD |
| ☒ | 1705–41–ST–ENG–901–23 | NOZZLE REINFORCEMENTS DETAIL |
| ☒ | 1705–41–ST–ENG–901–51 | FABRICATION TOLERANCES |
| ☒ | 1705–41–ST–ENG–901–52 | TOOLING TOLERANCES |
| ☒ | 1705–41–ST–ENG–901–53 | SUPPORT SADDLES FOR HORIZONTAL EXCHANGERS |
| ☐ | 1705–41–ST–ENG–901–54 | STACKED EXHANGER SUPPORTS |
| ☐ | 1705–41–ST–ENG–901–55 | BRACKETS FOR VERTICAL EXCHANGERS |
| ☐ | 1705–41–ST–ENG–901–56 | SET OF WEDGES FOR STACKED EXCHANGERS |
| ☒ | 1705–41–ST–ENG–901–57 | LIFTING LUGS |
| ☒ | 1705–41–ST–ENG–901–58 | LIFTING RINS AND PULL RODS |
| ☒ | 1705–41–ST–ENG–901–59 | JACK SCREW AND STOP CENTERING PIN |
| ☐ | 1705–41–ST–ENG–901–60 | TEST PROCEDURE AES–AET PC>PT |
| ☐ | 1705–41–ST–ENG–901–61 | TEST PROCEDURE BES–BET PC>PT |
| ☐ | 1705–41–ST–ENG–901–62 | TEST PROCEDURE AEU |
| ☐ | 1705–41–ST–ENG–901–63 | TEST PROCEDURE BEU |
| ☐ | 1705–41–ST–ENG–901–64 | TEST PROCEDURE AET PT>PC |
| ☐ | 1705–41–ST–ENG–901–65 | TEST PROCEDURE BET PT>PC |
| ☒ | 1705–41–ST–ENG–901–66 | GASKET SEAM ORIENTATION |
| ☒ | 1705–41–ST–ENG–901–67 | TUBE HOLE GROOVING |
| ☐ | 1705–41–ST–ENG–901–68 | TUBE WELDING ON TUBESHEETS |
| ☐ | 1705–41–ST–ENG–901–69 | COUPLINGS FOR TAPPED CONNECTIONS |
| ☐ | 1705–41–ST–ENG–901–70 | COMPOSITE COUPLINGS |
| ☐ | 1705–41–ST–ENG–901–71 | BRIGGS PLUGS FOR COUPLINGS |
| ☐ | 1705–41–BC–ENG–110 | BRACKET FOR PLATFORMS |
| ☐ | 1705–41–BC–ENG–111 | BRACKET FOR PLATFORMS ON VESSELS |
| ☐ | 1705–41–BC–ENG–109 | SAFETY BAR |
| ☐ | 1705–41–BC–ENG–106 | STANDARD DETAILS OF LADDERS |
| ☐ | 1705–41–BC–ENG–103 | STANDARD DETAILS OF HANDRAILS |

## NOZZLES EXT. ATTACHMENTS; LOADS & REQUIREMENTS*

| | | | |
|---|---|---|---|
| 1 | NOZZLE'S LOAD WILL BE AS PER SPEC. (OR MR) | ⊗YES | ○NO |
| 2 | NOZZLE'S LOAD WILL BE AS PER TABLE ON NEXT SHEET(S). | ○YES | ⊗NO |
| 3 | PIPE CLIPS REQ'D. | ○YES | ⊗NO |
| 4 | PLATFORMS AND LADDERS REQ'D. | ○YES | ⊗NO |
| 5 | LADDERS REQ'D. | ○YES | ⊗NO |

* TO BE CONFIRMED BY PIPING AND CIVIL DEPARTEMENTS.

## OPERATING CASE FOR MECHANICAL DESIGN

| OPERATING CASES | TUBE SIDE TEMPERATURE °C IN | TUBE SIDE TEMPERATURE °C OUT | SHELL SIDE TEMPERATURE °C IN | SHELL SIDE TEMPERATURE °C OUT | TUBE SIDE PRESSURE Barg | SHELL SIDE PRESSURE Barg | TUBE METAL °C TEMPERATURE | SHELL METAL °C TEMPERATURE | TUBESHEET METAL °C TEMPERATURE |
|---|---|---|---|---|---|---|---|---|---|
| TUBE SIDE: START–UP | 27 | 27 | 0 WINTER<br>70 SUMMER | | 4.7 | ATM | 26.5 WINTER<br>27.5 SUMMER | 0 WINTER<br>70 SUMMER | 26.9 WINTER<br>27.1 SUMMER |
| SHELL SIDE: START–UP | 27 | 27 | 144 | 144 | 4.7 | –0.05 | 51 | 144 | 38 |
| TUBE SIDE: SHUT DOWN | 27 | 27 | 27 | 27 | 4.7 | ATM | 27 | 27 | 27 |
| SHELL SIDE: SHUT DOWN | 27 | 27 | 144 | 144 | 4.7 | –0.05 | 51 | 144 | 38 |
| TUBE SIDE: DEPRESSURIZATION | | | | | | | | | |
| SHELL SIDE: DEPRESSURIZATION | | | | | | | | | |
| NORMAL CASE (A) (NORMAL) | 27 | 27 | 144 | 144 | 4.7 | –0.05 | 51 | 144 | 38 |
| NORMAL CASE (B) (RUNAWAY) | 27 | 37 | 150 | 150 | 4.7 | 0.09 | 62 | 150 | COLD:43, HOT:57 |

## MATERIALS

| | |
|---|---|
| **SHELL** | |
| BARREL | A516 GR 60 |
| FLANGES | – |
| NOZZLE FROM PIPE/PLATE | A333 GR 6/A516 GR 60 |
| NOZZLE FLANGES/COUPLINGS | A350 LF2 |
| NOZZLE REINFORCEMENT PAD | A516 GR 60 |
| SADDLES | A285 GR C |
| SADDLES WEAR PLATES | A516 GR 60 |
| EXPANSION JOINT | – |
| **SHELL COVER** | |
| BARREL | – |
| COVER | – |
| FLANGES | – |
| **CHANNEL** | |
| BARREL | A516 GR 60 |
| FLANGES | A266 CL.4 |
| COVER | A516 GR 60 |
| FLAT COVER | – |
| NOZZLE FROM PIPE/PLATE | A333 GR 6/A516 GR 60 |
| NOZZLE FLANGES/COPLINGS | A350 LF2 |
| NOZZLE REINFORCEMENT PAD | A516 GR 60 |
| PARTITION PLATE | A516 GR 60 |
| **TUBE BUNDLE** | |
| TUBES | A179 |
| TUBESHEET | A266 CL.4 |
| BAFFLES/SUPPORTS/IMPINGMENT PLATE | A516 GR 60 |
| TIE RODS/SPACER | C.S./A179 |
| **BOLTS AND NUTS** | |
| SHELL/COVER | – |
| SHELL/CHANNEL | A193 GR B7/A194 GR 2H |
| CHANNEL/COVER | – |
| **GASKETS** | |
| SHELL/COVER | – |
| SHELL/TUBESHEET | – |
| CHANNEL/TUBESHEET | (11) |
| CHANNEL/COVER | – |

## SUPPLIED BY MANUFACTURER

| | | |
|---|---|---|
| PAINTING | ⊗YES | ○NO |
| INSULATION SUPPORTS | ⊗YES | ○NO |
| FIREPROOFING SUPPORTS | ○YES | ⊗NO |
| CLIPS FOR LADDERS & PLATFORMS, PIPE SUPPORTS & GUIDES | ○YES | ⊗NO |
| LIFTING LUGS | ⊗YES | ○NO |
| TEST RINGS | ○YES | ⊗NO |
| NAME PLATE | ⊗YES | ○NO |
| EARTH LUG | ⊗YES | ○NO |
| TEMP.COVER, GASKET AND BOLTING FOR SHIPMENT | ⊗YES | ○NO |

## GENERAL NOTES:

(1) DIMENSIONS ARE IN MILLIMETERS, UNLESS OTHERWISE NOTED.
(2) ALL THICKNESSES SPECIFIED ON DWG ARE MINIMUM AFTER FORMING AND MACHINING REQUIRED. THE MANUFACTURER SHALL BE RESPONSIBLE FOR DETAIL DESIGN.
(3) THICKNESSES, WEIGHTS, AND LOADS ARE INDICATED FOR ESTIMATION PURPOSE ONLY. MANUFACTURER SHALL CONFIRM THICKNESSES, WEIGHTS AND LOADS, HE IS RESPONSIBLE FOR MECHANICAL DESIGN.
(4) BOLT HOLES SHALL BE STRADDLE OF MAIN AXIS.
(5) NOZZLES STAND OUT IS REFERRED FROM VESSEL CENTER LINE TO FLANGES CONTACT FACE.
(6) FLANGE FACING TO BE IN ACCORDANCE WITH ASME B16.5 FOR 24" OR LESS AND B16.47 SERIE B FOR LARGER, SURFACE FINISH: SPIRAL SERRATED FINISH, ROUGHNESS 3.2 TO 6.3 $\mu m$.
(7) ALLOWABLE STRESS FOR ANCHOR BOLTS TO BE: 110 MPa.
(8) PAINTING SHALL BE AS PER SPECIFICATION 1705–41–SP–ENG–304.
(9) FLANGE 24" AND BELOW SHALL BE AS PER ASME B16.5 AND FLANGE LARGER THAN 24" SHALL BE AS PER ASME B16.47 SERIES B.
(10) ALL WELDED ATTACHMENTS TO THE VESSEL TO BE SUPPLIED BY THE VESSEL MANUFACTURER.
(11) GASKET MATERIAL: S.S. DOUBLE METAL JACKETED FIBER FILLED.
(12) LOADING DATA AT BASE IS PRIMARY AND WILL BE FINALIZED LATER.
(13) DRILLING AND TOLERANCES OF TUBESHEET: SEE TEMA.
(14) DRILLING AND TOLERANCES OF BAFFLES AND SUPPORT PLATES: SEE TEMA.
(15) WHERE RADIUS IS NOT DIMENSIONED, R=12 mm.
(16) BY–PASS STRIP SHALL BE CONTINOUSLY WELDED TO BAFFLES.
(17) BOTH ENDS OF TIE–RODS SHALL BE I.S.O THREADED FOR 50 mm.
(18) THREADED HOLES IN FIXED TUBESHEET SHALL NOT BE COMPLETELY DRILLED.
(19) DIAMETER OF HOLES FOR TIE–RODS IN BAFFLES: TIE–ROD DIA.+0.5 mm.
(20) EDGES OF HOLES IN BAFFLES SHALL BE ROUNDED (R=2) OR BEVELLED.
(21) PROVIDE HOLES 6 DIA. IN PASS PARTITION.
(22) GASKET MATERIAL: REINFORCED FLEXIBLE GRAPHITE, 1.5 mm THICK FOR ALL DIAMETERS AS PER ASME B16.21.
(23) SUPPORT SADDLES TYPE II–19" (SEE 1705–41–ST–ENG–901–53). ⚠
(24) WITH BLIND FLANGE, BOLTING AND GASKET.
(25) ALL NOZZLES SIZE 2" SHALL BE PROVIDED WITH 2 STIFFENERS (SECTION: 6x30) EACH AT 90° APART.

## DESIGN DATA

| | | | |
|---|---|---|---|
| SERVICE | | PREPOLYMERIZER CONDENSER | |
| DESIGN CODE | | ASME VIII DIV.1, TEMA R | |
| INSPECTION AUTHORITY (STAMP) | | NO | |
| TYPE ACC. TO TEMA | | BEM | |
| ORIENTATION/QUANTITY | | HORIZONTAL/1 | |
| SHELL IN SERIES/PARALLEL | | 1/1 | |
| | | SHELL SIDE | TUBE SIDE |
| FLUID | | STYRENE | COOLING WATER |
| DENSITY IN/OUT | $Kg/m^3$ | 3.24/780 | |
| OPERATING TEMPERATURE IN/OUT | °C | 150/150 | 27/37 |
| OPERATING PRESSURE | barg | 0.09 | 4.7 |
| DESIGN TEMPERATURE | °C | 220/220 | 220 |
| DESIGN PRESSURE | barg | 8.5/F.V. | 7.2 |
| M.D.M.T. | °C | –27 | –27 |
| SHOP TEST PRESSURE | barg | 11 | 9.36 |
| INSULATION TYPE/THICKNESS | mm | P.P./40 | P.P./40 |
| CORROSION ALLOWANCE | mm | 3.2 | 3.2 |
| IMPACT TEST | | AS PER CODE | AS PER CODE |
| JOINT EFFICIENCY | | 0.85 | 0.85 |
| RADIOGRAPHY | | SPOT | SPOT |
| STRESS RELIEVING | | NO | NO |
| BASIC WIND SPEED (Km/h)/EXPOSURE/IW | | 160@10m/D/1 | |
| EARTHQUAKE/SOIL TYPE/I | | ZONE 4/Sd/1.25 | |
| EQUIPMENT PAINTING | | (8) | |
| FIREPROOFING FOR SUPPORT/ THICKNESS | | NO | |

## LOADING DATA AT BASE ⚠

| | MAX. OPERATING | TEST | EARTHQUAKE | WIND |
|---|---|---|---|---|
| WEIGHT (KN) | 16.1 | 17.2 | 16.1 | – |
| SHEARING LOAD (KN) | 9.7 | 0.3 | 9.7 | 1.3 |
| MOMENT (KN.m) | 5 | 0.14 | 5 | 0.7 |

| REFERENCE SPECIFICATIONS NUMBER | | REFERENCE DOCUMENTS NUMBER | |
|---|---|---|---|
| ☒ | 1705–41–SP–ENG–901 | ☒ | 1705–41–DT–ENG–831 |
| ☒ | 1705–41–RP–ENG–907 | | |
| ☒ | 1705–41–SP–ENG–302 | | |
| ☐ | 1705–41–SP–ENG–303 | | |
| ☒ | 1705–41–SP–ENG–304 | | |
| ☐ | 1705–41–SP–ENG–305 | | |

DRY WEIGHT = 1210 kg

WEIGHT OF TUBE BUNDLE = 600 kg

* TO BE CONFIRMED LATER.

| REV. | DATE | DESCRI. | DRWN. | CHK. | APP. | CHK. | APP. | APP. |
|---|---|---|---|---|---|---|---|---|
| | | | SUBCONTRACTOR | | | CONTRACTOR | | OWNER |
| 2 | | | | | | | | |
| 1 | 07/05/06 | IFA | S.M. | H.S. AR.N. | A.KH. | | | |
| 0 | 25/09/05 | IFC | S.M. | H.S. AR.N. | A.KH. | | | |

TABRIZ PETROCHEMICAL CO.

HIPS II ( LINE D ) PRODUCTION PLANT
TABRIZ PETROCHEMICAL CO.

DRAWING TITLE: ENGINEERING DWG.
41–E–202
(PREPOLYMERIZER CONDENSER)

P.I.R.E. Co.

| | | | |
|---|---|---|---|
| UNIT: D | DISC: MEC | SCALE: 1:20 | DWG. SIZE: A3 |
| DWG.NO: 1705–41–DT–ENG–941 | | SH:1 OF 3 | REV:1 |

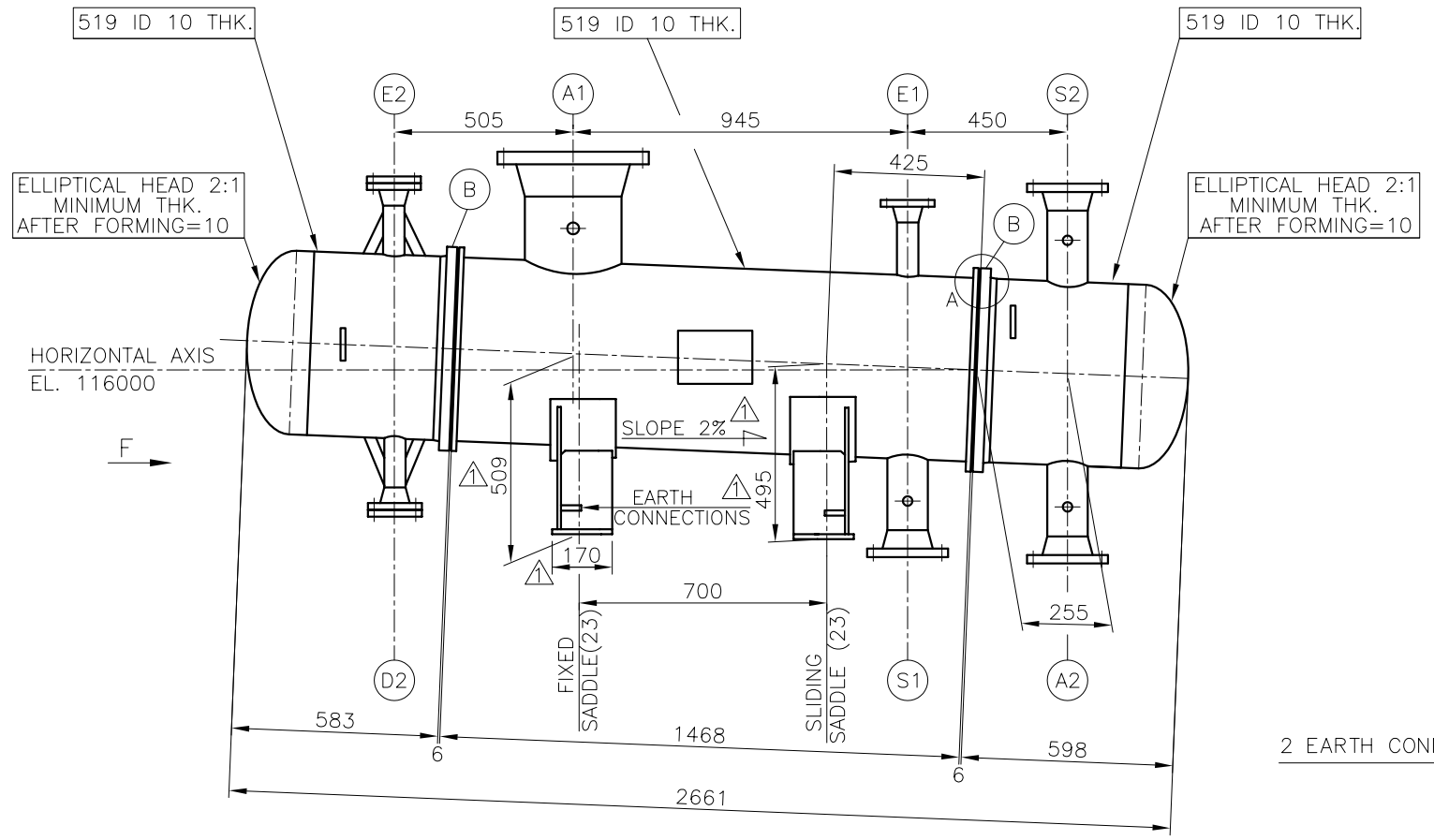


## VIEW "F"

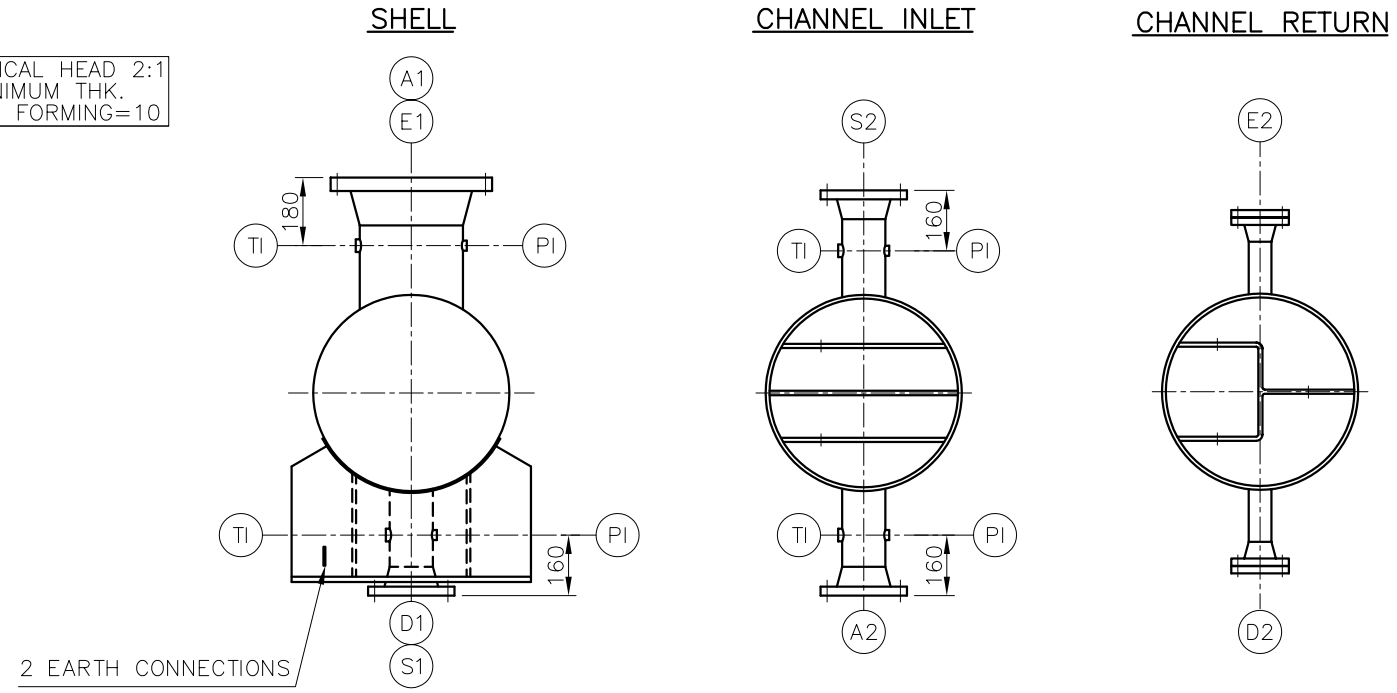


## STAND OUT DETAIL

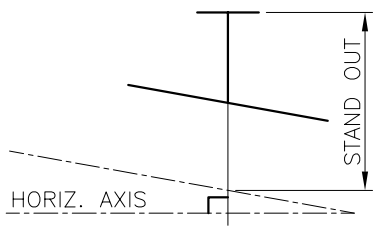


## DETAIL "A"

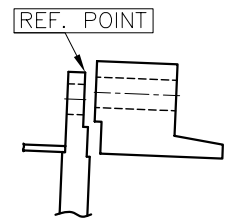


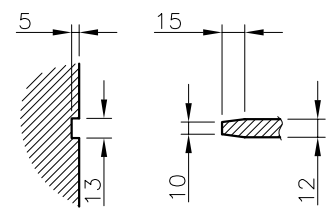


## GASKETS DETAILS

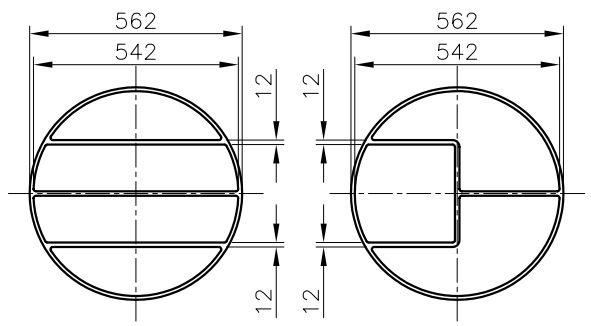


## FLANGE "B"

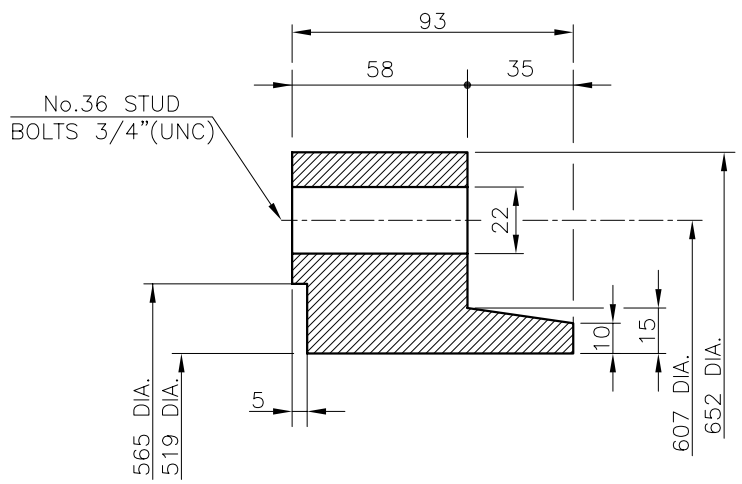


## TUBESHEET DETAIL

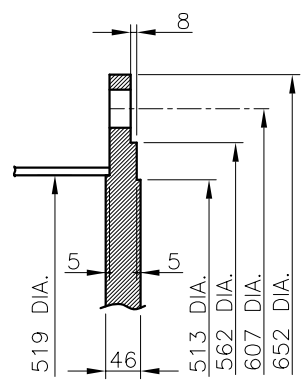


| REV. | DATE | DESCRI. | DRWN. | CHK. | APP. | CHK. | APP. | APP. |
|---|---|---|---|---|---|---|---|---|
| 2 | | | | | | | | |
| 1 | 07/05/06 | IFA | S.M. | H.S. AR.N. | A.KH. | | | |
| 0 | 25/09/05 | IFC | S.M. | H.S. AR.N. | A.KH. | | | |
| | | | SUBCONTRACTOR | | | CONTRACTOR | | OWNER |

TABRIZ PETROCHEMICAL CO.

HIPS II (LINE D) PRODUCTION PLANT
TABRIZ PETROCHEMICAL CO.

SADRA

DRAWING TITLE: ENGINEERING DWG.

41-E-202

(PREPOLYMERIZER CONDENSER)

P.I.R.E. Co.

| UNIT: D | DISC: MEC | SCALE: 1:20 | DWG. SIZE: A3 |
|---|---|---|---|
| DWG.NO: 1705-41-DT-ENG-941 | | SH: 2OF3 | REV: 1 |

## BUNDLE LAY-OUT

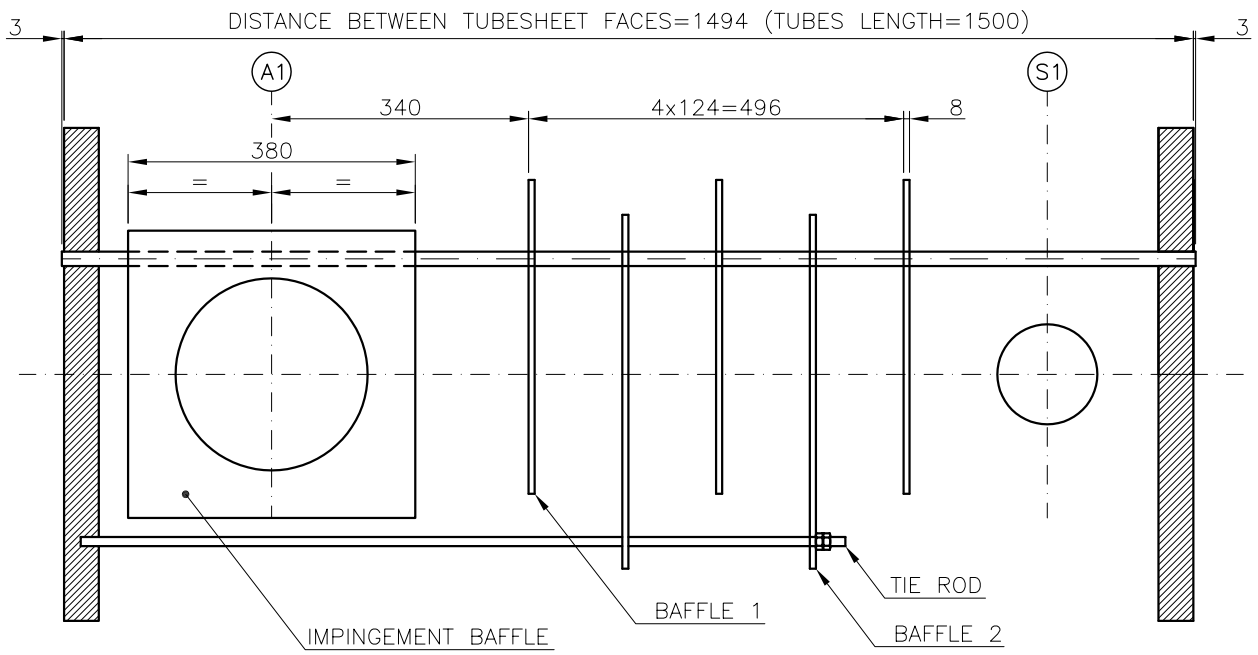


- 6 SEAL RODS 18 DIA.
- 6 TIES RODS 12 DIA.
- 6 SPACER 19.05 DIA., 2.11 THK.
- 2 ANTI BY-PASS 35x10
- 1 ANTI BY-PASS 65x10 } FIRST TO LAST BAFFLE
- 2 ANTI BY-PASS 20x10

## CROSS BUNDLE LAY-OUT

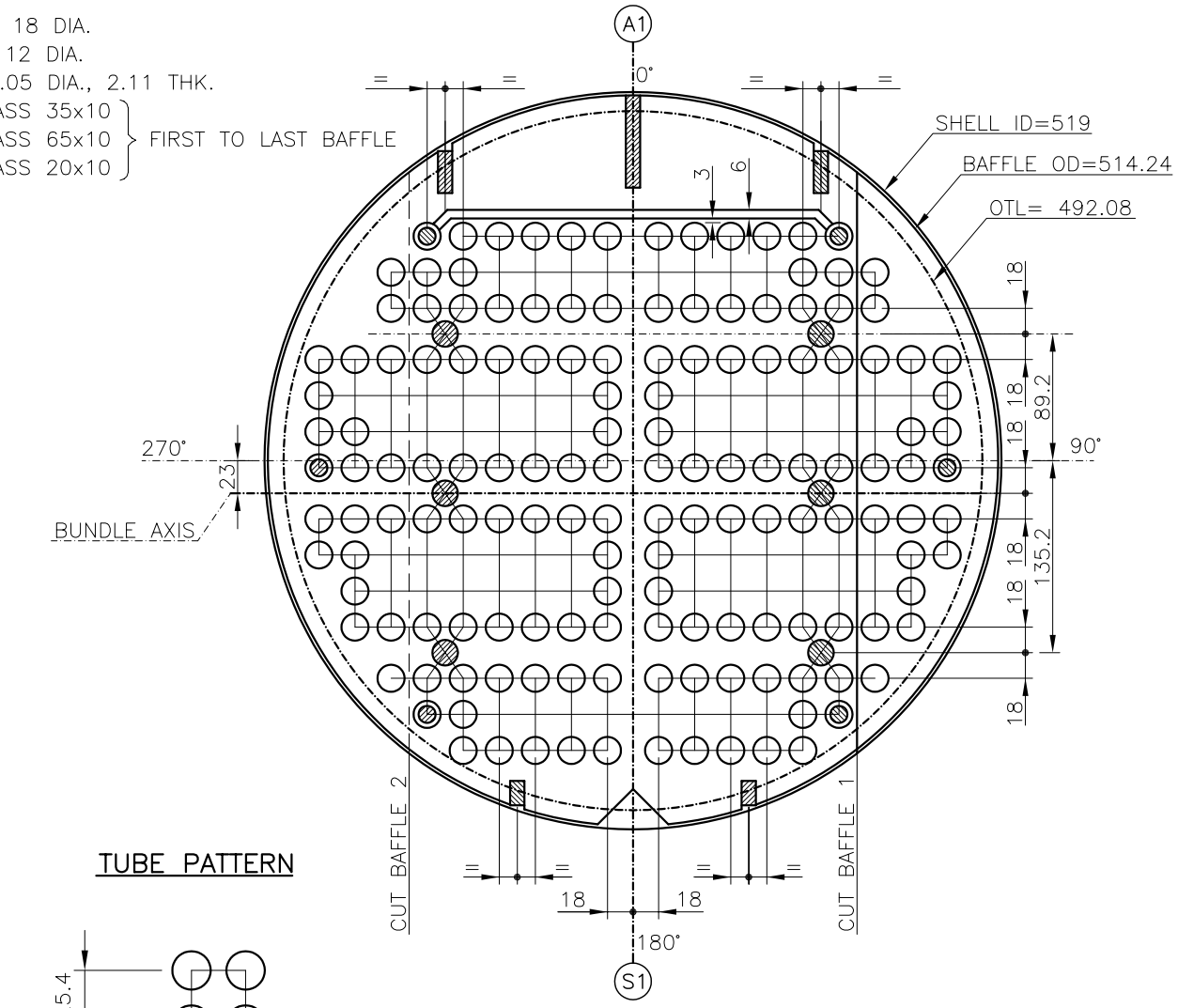


## BAFFLES (1) DETAIL

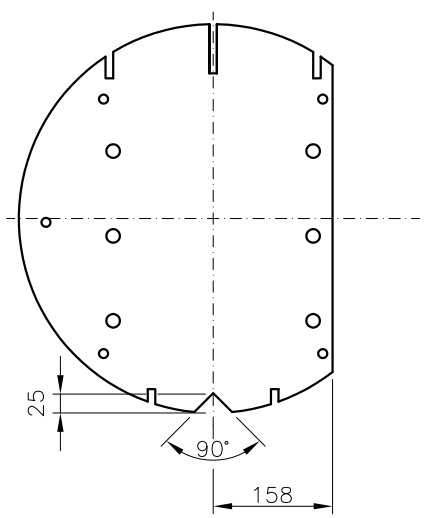


## BAFFLES (2) DETAIL

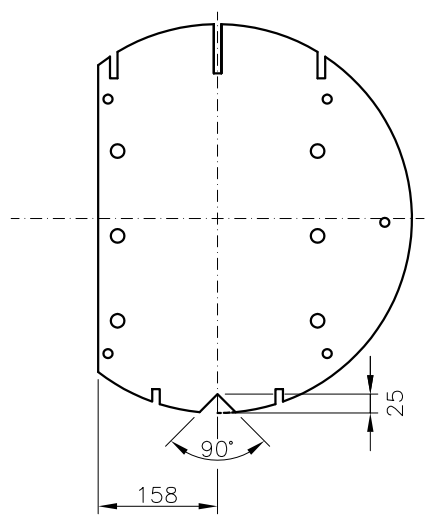


## TUBE PATTERN

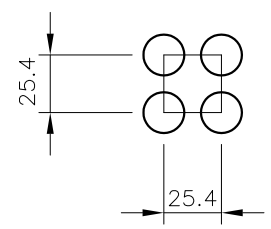


TOTAL NUMBER OF TUBES=210

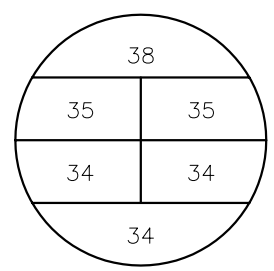


## TUBE BUNDLE DATA

| | | | | | | | | | | | | | | |
|---|---|---|---|---|---|---|---|---|---|---|---|---|---|---|
| NO. TUBE HOLES | 0 | 210 | TUBES O.D. | mm | 19.05 | THK.(MIN.) | mm | 2.11 | LENGTH | mm | 1500 | TUBE LAYOUT | DEG. | 90° |
| TUBE PITCH | mm | 25.4 | NO. OF PASSES | | 6 | SURFACE | $m^2$ | 17.6 | TUBE TO TUBESHEET JOINT | | | EXPANDED + 2GROOVES | | |

| REV. | DATE | DESCRI. | DRWN. | CHK. | APP. | CHK. | APP. | APP. |
|---|---|---|---|---|---|---|---|---|
| 2 | | | | | | | | |
| 1 | 07/05/06 | IFA | S.M. | H.S. AR.N. | A.KH. | | | |
| 0 | 25/09/05 | IFC | S.M. | H.S. AR.N. | A.KH. | | | |
| | | | SUBCONTRACTOR | | | CONTRACTOR | | OWNER |

TABRIZ PETROCHEMICAL CO.

HIPS II (LINE D) PRODUCTION PLANT
TABRIZ PETROCHEMICAL CO.

SADRA

DRAWING TITLE: ENGINEERING DWG.
41-E-202
(PREPOLYMERIZER CONDENSER)

P.I.R.E. Co.

UNIT: D | DISC: MEC | SCALE: 1:10 | DWG. SIZE: A3
DWG.NO: 1705-41-DT-ENG-941 | SH: 3 OF 3 | REV: 1