Process Measurement

API RECOMMENDED PRACTICE 551
SECOND EDITION, FEBRUARY 2016



AMERICAN PETROLEUM INSTITUTE

Provided by : www.spic.ir

Copyright American Petroleum Institute

Special Notes

API publications necessarily address problems of a general nature. With respect to particular circumstances, local, state, and federal laws and regulations should be reviewed.

Neither API nor any of API's employees, subcontractors, consultants, committees, or other assignees make any warranty or representation, either express or implied, with respect to the accuracy, completeness, or usefulness of the information contained herein, or assume any liability or responsibility for any use, or the results of such use, of any information or process disclosed in this publication. Neither API nor any of API's employees, subcontractors, consultants, or other assignees represent that use of this publication would not infringe upon privately owned rights.

API publications may be used by anyone desiring to do so. Every effort has been made by the Institute to assure the accuracy and reliability of the data contained in them; however, the Institute makes no representation, warranty, or guarantee in connection with this publication and hereby expressly disclaims any liability or responsibility for loss or damage resulting from its use or for the violation of any authorities having jurisdiction with which this publication may conflict.

API publications are published to facilitate the broad availability of proven, sound engineering and operating practices. These publications are not intended to obviate the need for applying sound engineering judgment regarding when and where these publications should be utilized. The formulation and publication of API publications is not intended in any way to inhibit anyone from using any other practices.

Any manufacturer marking equipment or materials in conformance with the marking requirements of an API standard is solely responsible for complying with all the applicable requirements of that standard. API does not represent, warrant, or guarantee that such products do in fact conform to the applicable API standard.

Users of this Recommend Practice should not rely exclusively on the information contained in this document. Sound business, scientific, engineering, and safety judgment should be used in employing the information contained herein.

Provided by : www.spic.ir

All rights reserved. No part of this work may be reproduced, translated, stored in a retrieval system, or transmitted by any means, electronic, mechanical, photocopying, recording, or otherwise, without prior written permission from the publisher. Contact the Publisher, API Publishing Services, 1220 L Street, NW, Washington, DC 20005.

Copyright © 2016 American Petroleum Institute

Copyright American Petroleum Institute

Foreword

Nothing contained in any API publication is to be construed as granting any right, by implication or otherwise, for the manufacture, sale, or use of any method, apparatus, or product covered by letters patent. Neither should anything contained in the publication be construed as insuring anyone against liability for infringement of letters patent.

Shall: As used in a standard, “shall” denotes a minimum requirement in order to conform to the specification.

Should: As used in a standard, “should” denotes a recommendation or that which is advised but not required in order to conform to the specification.

This document was produced under API standardization procedures that ensure appropriate notification and participation in the developmental process and is designated as an API standard. Questions concerning the interpretation of the content of this publication or comments and questions concerning the procedures under which this publication was developed should be directed in writing to the Director of Standards, American Petroleum Institute, 1220 L Street, NW, Washington, DC 20005. Requests for permission to reproduce or translate all or any part of the material published herein should also be addressed to the director.

Generally, API standards are reviewed and revised, reaffirmed, or withdrawn at least every five years. A one-time extension of up to two years may be added to this review cycle. Status of the publication can be ascertained from the API Standards Department, telephone (202) 682-8000. A catalog of API publications and materials is published annually by API, 1220 L Street, NW, Washington, DC 20005.

Suggested revisions are invited and should be submitted to the Standards Department, API, 1220 L Street, NW, Washington, DC 20005, standards@api.org.

Provided by : www.spic.ir

Copyright American Petroleum Institute

Provided by : www.spic.ir

Copyright American Petroleum Institute

Contents

Page

1 Scope . . . 1
2 Normative References . . . 1
3 General . . . 7
3.1 Introduction . . . 7
3.2 Measurement Terminology . . . 7
3.3 Instrument Range Selection . . . 8
3.4 Instrument Selection . . . 10
3.5 Mechanical Integrity . . . 12
3.6 Metallurgy and Soft Goods Selection . . . 12
3.7 Signal Transmission and Communications . . . 17
3.8 Power, Grounding, and Isolation . . . 19
3.9 Local Indicators . . . 20
3.10 Tagging and Nameplates . . . 21
3.11 Configuration and Configuration Management . . . 22
3.12 Documentation . . . 22
4 Temperature . . . 22
4.1 Introduction . . . 22
4.2 Thermowells . . . 23
4.3 Thermocouples . . . 30
4.4 Resistance Temperature Devices . . . 36
4.5 Thermistors . . . 39
4.6 Distributed Temperature Sensing . . . 40
4.7 Radiation Pyrometers . . . 41
4.8 Temperature Element Wiring . . . 41
4.9 Temperature Signal Conditioners and Transmitters . . . 42
4.10 Local Temperature Indicators . . . 43
5 Pressure . . . 45
5.1 Introduction . . . 45
5.2 Pressure Measurements . . . 46
5.3 Pressure and Differential Pressure Transmitters . . . 47
5.4 Pressure Transmitter Performance . . . 47
5.5 Pressure Gauges . . . 52
5.6 Miscellaneous Pressure Devices . . . 55
6 Flow . . . 57
6.1 Introduction . . . 57
6.2 Head Type Flow Meters . . . 61
6.3 Variable-Area Meters . . . 72
6.4 Magnetic Flowmeters . . . 76
6.5 Turbine Meters . . . 82
6.6 Positive Displacement Meters . . . 90
6.7 Vortex Meters . . . 91
6.8 Ultrasonic Flow Meters . . . 94
6.9 Coriolis Flow Meter . . . 99
6.10 Thermal Dispersion Meter . . . 101

Provided by : www.spic.ir

Copyright American Petroleum Institute

Contents

Page

7 Level . . . 103
7.1 Introduction . . . 103
7.2 Vessel Connections . . . 103
7.3 Level Transmitters . . . 110
7.4 Level Switches . . . 144
7.5 Local Level Indicators . . . 145
7.6 Specific Gravity Precautions . . . 158
7.7 Emulsions and Foams . . . 159

8 Instrument Installation . . . 162
8.1 Introduction . . . 162
8.2 General Requirements . . . 162
8.3 Process Connections . . . 162
8.4 Connection Lengths . . . 168
8.5 Instrument Access . . . 169
8.6 Impulse Line Installation . . . 170
8.7 Instrument Valves and Manifolds . . . 175
8.8 Flushing Connections and Bleed Rings . . . 183
8.9 Calibration Connections . . . 183
8.10 Supports . . . 183
8.11 Environment . . . 185
8.12 Thermal Stress, Structural Loads and Vibration . . . 186
8.13 Process Pulsation . . . 187
8.14 Differential Pressure Flow Meters . . . 187
8.15 Process Differential Pressure Measurement . . . 187
8.16 Draft Measurement . . . 187
8.17 Cryogenic Installations . . . 192
8.18 Oxygen Installations . . . 192

9 Instrument Protection . . . 195
9.1 Introduction . . . 195
9.2 Diaphragm Seals . . . 196
9.4 Purges . . . 204

10 Instrument Heating and Climate Protection . . . 209
10.1 Introduction . . . 209
10.2 General . . . 211
10.3 Electric versus Steam Tracing . . . 212
10.4 Light Steam Tracing . . . 213
10.5 Insulation and Protective Coverings . . . 214
10.6 Instrument Housings . . . 214
10.7 Viscous Liquids and Condensation Prevention . . . 217
10.8 Special Applications . . . 217
10.9 Electrical Tracing Methods and Materials . . . 218
10.10 Steam Tracing Methods and Materials . . . 218

Provided by : www.spic.ir

Copyright American Petroleum Institute

Contents

Page

Bibliography 221

Figures

1 Thermowell Terminology 24
2 Thermowell Installation 25
3 Standard Thermowells 27
4 Van Stone Well in a Studding Outlet 28
5 Ceramic Thermowell 29
6 Metal Sheathed Thermocouple Types 31
7 Type Skin Thermocouple with Radiation Shield 34
8 Fixed Thermocouple Head and Sheath with Type S Expansion Loop 35
9 Knife Edge Tube Skin Thermocouple 35
10 Furnace Tube Skin Thermocouple 35
11 Accuracy Limits and Usable Temperature Ranges for Tthermistors and RTDs 37
12 Example Pyrometer Installation for Claus Reactor 42
13 Sheathed Type Thermocouple with Armored Lead 42
14 Transmitter Mounted in Connection Head 43
15 Definition of Pressure 46
16 Swirl with Elbows in 90° Planes 59
17 Orifice Flanges 66
18 Integral Orifice Meter Run 67
19 Example Expansion Coefficients 68
20 Classical Venturi Tube Dimensions 69
21 VDI/VDE 3513-2 Variable Meter Accuracy Plot 74
22 Variable Area Meter Installation 76
23 Turbine Meter Cutaway 83
24 Turbine Meter Bearing Types 86
25 Relative Thermal Conductivity of Common Gases 102
26 Gauge Glass Assemblies 107
27 Instrument Connections to Bottom Heads 108
28 General Formulas for the Calibration of a Differential Level Instrument 111
29 Differential Level Transmitters with Wet Legs 112
30 Steam Drum Density Compensation Fitting 115
31 Displacer Transmitter Mounting 118
32 Arrangement for a Displacer Wet Calibration 119
33 Nuclear Level Transmitter 121
34 RF Capacitance/Admittance or GWR Level Transmitter Mounting 130
35 Critical Dimensions for GWR Installation 137
36 Typical Display for Configuring a Transit Time Level Instrument 138
37 Grade Mounted Overflow Alarm Switches 146
38 Typical Bolted Bonnet Gauge Valve 150
39 Measurement Taps for Interface and Level Services 153
40 Follower Type Magnetic Level Gauge 155
41 Magnetic Gauge with Flag Indicators 156
42 Transmitter Saturation Values with a 0.70 S.G. Calibration 159
43 Specific Gravity-Temperature Relationship for Hydrocarbons 160
44 Liquid Communication with Non-Homogeneous Fluids 161
45 Pressure Transmitter Installations 164
46 End View of Horizontal Pipe Taps 165

Provided by : www.spic.ir

Copyright American Petroleum Institute

Contents

Page

47 Settling Chamber . . . 167
48 Differential Pressure Measurement . . . 168
49 Tapped Hex Head Bull Plug . . . 171
50 API Type III High Pressure Tube Fitting . . . 173
51 Rodding Tee's . . . 176
52 Typical Rodding Unit for Orifice Flanges . . . 177
53 Valve Arrangement for Instrument Manifolds . . . 177
54 Two Bolt Pressure Transmitter . . . 179
55 Tightly Coupled Transmitter Side Mounted to a Mono-flange . . . 182
56 Reducing Flushing Ring . . . 184
57 Instrument Line Mounts . . . 185
58 Close Coupled Flow Metering Installation Details . . . 188
59 Piezometric Wind Stabilization Fitting Fabrication . . . 189
60 Piezometric Wind Stabilization Fitting Fabrication . . . 190
61 A Commercial Piezometric Wind Stabilization Fitting . . . 191
62 Wafer Style Diaphragm Seal . . . 197
63 Level Transmitter with Capillaries . . . 202
64 Freezing Points of Ethylene Glycol and Water Mixtures . . . 203
65 Pressure Gauge Installations . . . 205
66 Recommended Purge Rates for Various Orifice Flange Tap Sizes . . . 208
67 Purge Installations . . . 210
68 Typical Molded Enclosures . . . 215
69 Instrument Electrical Tracing . . . 219

Tables

1 Conversion Factors for Inches of Water at Common Base Temperatures . . . 9
2 Output Signal, mA . . . 18
3 Standard ISA/ASTM Thermocouples Types . . . 30
4 Thermocouple Interchangeability Tolerance . . . 31
5 Recommended Limit for Single Element Sheathed Thermocouples . . . 31
6 Standard Resistant Temperature Elements . . . 36
7 Alternate Resistant Temperature Elements . . . 37
8 Thermal Fill Types . . . 45
9 ASME B40.1 Pressure Gauge Grades . . . 53
10 Comparison of Flow Metering Technologies . . . 58
11 Non-Ideal Flow Run Conditions Covered by ISO TR 12767 . . . 64
12 Typical Piping Interface with an Instrument . . . 104
13 Comparison of Nuclear Detectors . . . 122
14 Types of Isotopes . . . 124
15 Nuclear Regulations by Source Size . . . 127
16 Probe Types . . . 136
17 Typical Viscosities . . . 136
18 Tubing Support . . . 174
19 Diaphragm Seal Materials . . . 198
20 Purge Fluids . . . 207

Provided by : www.spic.ir

Copyright American Petroleum Institute

Process Measurement

1 Scope

This document provides recommendations about the selection and design of process measurement systems. Further, it supplies information on their implementation and commissioning.

It covers the instrumentation life cycle including selection, design, installation, commissioning and operation. It is pertinent to those involved with instrument application including design firms, owner/operators, equipment package suppliers/integrators, construction and service personnel, as well as instrument manufacturers.

Instrument systems are often a compromise between the installed performance and maintainability. A system has to balance these requirements while ensuring that basic principles are upheld. This document assists in the understanding of these principals and making proper decisions.

This recommended practice is intended to be a source of good engineering practice. Its recommendations are practical and safe, which yield consistent and effective results.

2 Normative References

The following referenced documents are indispensable for the application of this document. For dated references, only the edition cited applies. For undated references, the latest edition of the referenced document (including any amendments) applies.

API Specification 6A, *Specification for Wellhead and Christmas Tree Equipment*

API Recommended Practice 556, *Instrumentation, Control, and Protective Systems for Gas Fired Heaters*

API Standard 602, *Steel Gate, Globe, and Check Valves for Sizes NPS 4 (DN 100) and Smaller for the Petroleum and Natural Gas Industries*

API Recommended Practice 2218, *Fireproofing Practices in Petroleum and Petrochemical Processing Plants*

API Recommended Practice 2350, *Overfill Protection for Storage Tanks in Petroleum Facilities*

API *MPMS* Chapter 1, *Vocabulary*

API *MPMS* Chapter 3.1B, *Standard Practice for Level Measurement of Liquid Hydrocarbons in Stationary Tanks by Automatic Tank Gauging*

API *MPMS* Chapter 3.3, *Standard Practice for Level Measurement of Liquid Hydrocarbons in Stationary Pressurized Storage Tanks by Automatic Tank Gauging*

API *MPMS* Chapter 3.6, *Measurement of Liquid Hydrocarbons by Hybrid Tank Measurement Systems*

API *MPMS* Chapter 14.3.1, *Concentric, Square-edged Orifice Meters*—Part 1: *General Equations and Uncertainty Guidelines*

API *MPMS* Chapter 14.3.2, *Concentric, Square-Edged Orifice Meters*—Part 2: *Specification and Installation Requirements*, 2000

API *MPMS* Chapter 14.3.2, *Concentric, Square-Edged Orifice Meters*—Part 2: *Specification and Installation Requirements*, 2007

Provided by : www.spic.ir

Copyright American Petroleum Institute

API *MPMS* Chapter 15, *Guidelines for the use of the International System of Units (SI) in the Petroleum and Allied Industries*

ASME B1.20.3 [1], *Dryseal Pipe Threads (Inch)*

ASME B16.34, *Valves-Flanged, Threaded, and Welding End*

ASME B16.36, *Orifice Flanges*

ASME B31.1, *Power Piping*

ASME B31.3, *Process Piping*

ASME B40.1, *Pressure Gauges (with ASME B40.100)*

ASME B40.3, *Bimetallic Indictors (with ASME B40.200)*

ASME B40.4, *Filled System Indictors (with ASME B40.200)*

ASME B40.9, *Thermowells for Thermometers and Electrical Temperature Sensors (with ASME B40.200)*

ASME B40.100, *Pressure Gauges and Gauge Attachments*

ASME B40.200, *Thermometers, Direct Reading and Remote Reading*

ASME BPVC Section I, *Rules for Construction of Power Boilers*

ASME BPVC Section IID, *Properties (Customary) Materials*

ASME MFC-3M, *Measurement of Fluid Flow in Pipes Using Orifice, Nozzle, and Venturi*

ASME MFC-6M, *Measurement of Fluid Flow in Pipes Using Vortex Flowmeters*

ASME MFC-8M, *Fluid Flow in Closed Conduits: Connections for Pressure Signal Transmissions Between Primary and Secondary Devices*

ASME MFC-14M, *Measurement of Fluid Flow Using Small Bore Precision Orifice Meters*

ASME MFC-19G, *Wet Gas Flowmetering Guideline*

ASME MFC-21.2, *Measurement of Fluid Flow by Means of Thermal Dispersion Mass Flowmeters*

ASME PTC-19.2, *Pressure Measurement Instruments and Apparatus Supplement*

ASME PTC-19.3 TW, *Thermowells Performance Test Codes*

ASTM A123 [2], *Standard Specification for Zinc (Hot-Dip Galvanized) Coatings on Iron and Steel Products*

ASTM A193, *Standard Specification for Alloy-Steel and Stainless Steel Bolting for High Temperature or High Pressure Service and Other Special Purpose Applications*

[1] ASME International, 3 Park Avenue, New York, New York 10016-5990, www.asme.org.
[2] ASTM International, 100 Barr Harbor Drive, West Conshohocken, Pennsylvania 19428, www.astm.org.

Provided by : www.spic.ir

Copyright American Petroleum Institute

ASTM A240, *Standard Specification for Chromium and Chromium-Nickel Stainless Steel Plate, Sheet, and Strip for Pressure Vessels and for General Applications*

ASTM A733, *Standard Specification for Welded and Seamless Carbon Steel and Austenitic Stainless Steel Pipe Nipples*

ASTM A780, *Standard Practice for Repair of Damaged and Uncoated Areas of Hot-Dip Galvanized Coatings*

ASTM B68, *Standard Specification for Seamless Copper Tube, Bright Annealed*

ASTM B75, *Standard Specification for Seamless Copper Tube*

ASTM C1055, *Standard Guide for Heated System Surface Conditions that Produce Contact Burn Injuries*

ASTM D351, *Standard Classification for Natural Muscovite Block Mica and Thins Based on Visual Quality*

ASTM D1418, *Standard Practice for Rubber and Rubber Lattices—Nomenclature*

ASTM D1600, *Standard Terminology for Abbreviated Terms Relating to Plastics*

ASTM DS56I, *Metals and Alloys in the Unified Numbering System (UNS) 12th Edition*

ASTM E230, *Standard Specification and Temperature-Electromotive Force (EMF) Tables for Standardized Thermocouples*

ASTM E235, *Standard Specification for Type K and Type N Mineral-Insulated, Metal-Sheathed Thermocouples for Nuclear or for Other High-Reliability Applications*

ASTM E515, *Standard Practice for Leaks Using Bubble Emission Techniques*

ASTM E608, *Standard Specification for Mineral-Insulated, Metal-Sheathed Base Metal Thermocouples*

ASTM E1137, *Standard Specification for Industrial Platinum Resistance Thermometers*

ASTM F992, *Standard Specification for Valve Label Plates*

ASTM G93, *Standard Practice for Cleaning Methods and Cleanliness Levels for Material and Equipment Used in Oxygen-Enriched Environments*

CGA 4.1 [3], *Cleaning Equipment for Oxygen Service*

DIN 43760 [4], *Electrical temperature sensors; reference tables for sensing resistors for resistors for resistance elements*

HPS N43.6 [5], *Sealed Radioactive Sources—Classification*

IEC 60068-2-11 [6], *Basic Environmental Testing Procedures Part 2: Tests—Test Ka: Salt Mist*

IEC 60381-1, *Analogue Signals for Process Control Systems Part 1: Direct Current Signals*

[3] Compressed Gas Association, 14501 George Carter Way, Suite 103, Chantilly, VA 20151, www.cganet.com.
[4] DIN Deutsches Institut für Normung e. V., Am DIN-Platz, Burggrafenstraße 6, 10787 Berlin, Germany, www.din.de.
[5] Health Physics Society, 1313 Dolley Madison Boulevard - Suite 402, McLean, Virginia 22101, hps.org.
[6] International Electrotechnical Commission, 3, rue de Varembé, P.O. Box 131, CH-1211, Geneva 20, Switzerland, www.iec.ch.

Provided by : www.spic.ir

Copyright American Petroleum Institute

IEC 60382, *Analogue pneumatic signal for process control systems*

IEC 60529, *Degrees of Protection Provided by Enclosures (IP Code)*

IEC 60584-3, *Thermocouples Part 3: Extension and compensating cables, Tolerances and identification system*

IEC 60715, *Dimensions of Low-Voltage Switchgear and Controlgear Standardized Mounting on Rails for Mechanical Support of Electrical Devices in Switchgear and Controlgear Installations*

IEC 60721-3-4, *Classification of Environmental Conditions—Part 3: Classification of Groups of Environmental Parameters and Their Severities—Section 4: Stationary Use at Non-Weather protected Locations*

IEC 60751, *Industrial platinum resistance thermometers and platinum temperature sensors*

IEC 60770-1, *Transmitters for use in industrial-process control systems Part 1: Methods for performance evaluation*

IEC 60770-3, *Transmitters for use in industrial-process control systems Part 3: Methods for performance evaluation of intelligent transmitters*

IEC 60947-5-4, *Low-voltage switchgear and controlgear—Part 5-4: Control circuit devices and switching elements Method of assessing the performance of low-energy contacts Special tests*

IEC 60947-5-6, *Low-Voltage switchgear and controlgear—Part 5-6: Control Circuit Devices and Switching Elements - DC Interface for Proximity Sensors and Switching Amplifiers (NAMUR)*

IEC 61298-2, *Process measurement and control devices General methods and procedures for evaluating performance Part 2: Tests under reference conditions*

IEC 61515, *Mineral Insulated Thermocouple Cables and Thermocouples*

IEC 61518, *Mating Dimensions between Differential Pressure (Type) Measuring Instruments and Flanged-On Shut-Off Devices up to 413 Bar (41,3 MPa)*

IEEE 515 [7], *The Testing, Design, Installation, and Maintenance of Electrical Resistance Trace Heating for Industrial Applications*

IEEE C37.90, *Standard for Relays and Relay Systems Associated with Electric Power Apparatus*

IEEE C37.90.1, *Surge Withstand Capability (SWC) Tests for Relays and Relay Systems Associated with Electric Power Apparatus*

IEEE C62.41, *IEEE Recommended Practice on Surge Voltages in Low-Voltage AC Power Circuits*

ISA 5.1 [8], *Instrumentation Symbols and Identification*

ISA S7.4, *Air Pressures for Pneumatic Controllers, Transmitters, and Transmission Systems*

ISA RP16.6, *Methods and Equipment for Calibration of Variable Area Meters (Rotameters)*

ISA RP42.00.01, *Nomenclature for Instrument Tube Fittings*

7 Institute of Electrical and Electronics Engineers, 445 Hoes Lane, Piscataway, New Jersey 08854, www.ieee.org.

8 The Instrumentation, Systems, and Automation Society, 67 Alexander Drive, Research Triangle Park, North Carolina, 22709, www.isa.org.

Provided by : www.spic.ir

Copyright American Petroleum Institute

ISA RP60.4, *Documentation for Control Centers*

ISA RP60.6, *Nameplates, Labels and Tags for Control Centers*

ISA 71.04, *Environmental Conditions for Process Measurement and Control Systems: Airborne Contaminants*

ISA 84.00.01 Part 1, *Functional Safety: Safety Instrumented Systems for the Process Industry Sector—Part 1: Framework, Definitions, System, Hardware and Software Requirements*

ISO 2186[9], *Fluid flow in closed conduits—Connections for pressure signal transmissions between primary and secondary elements*

ISO 2919, *Radiological protection—Sealed radioactive sources—General requirements and classification*

ISO 3966, *Measurement of fluid flow in closed conduits—Velocity area method using Pitot static tubes*

ISO 5167-2, *Measurement of Fluid Flow by Means of Pressure Differential Devices Inserted in Circular-Cross Section Conduits Running Full—Part 2: Orifice Plates*

ISO 7145, *Determination of Flowrate of Fluids in Closed Conduits of Circular Cross-Section—Method of Velocity Measurement at One Point of the Cross*

ISO 7194, *Measurement of fluid flow in closed conduits—Velocity-area methods of flow measurement in swirling or asymmetric flow conditions in circular ducts by means of current-meters or Pitot static tubes*

ISO TR 9464, *Guidelines for the use of ISO 5167*

ISO 9951, *Measurement of Gas Flow in Closed Conduits—Turbine Meters*

ISO 10790, *Measurement of Fluid Flow in Closed Conduits—Guidance to the Selection, Installation and Use of Coriolis Meters (Mass Flow, Density and Volume Flow Measurements)*

ISO TR 12767, *Measurement of fluid flow by means of pressure differential devices—Guidelines on the effect of departure from the specifications and operating conditions given in ISO 5167*

ISO 13359, *Measurement of Conductive Liquid Flow in Closed Conduits—Flanged Electromagnetic Flowmeters - Overall Length*

ISO TR 15377, *Measurement of fluid flow by means of pressure-differential devices—Guidelines for the specification of orifice plates, nozzles and Venturi tubes beyond the scope of ISO 5167*

ISO 23936-2, *Petroleum, petrochemical and natural gas industries—Non-metallic materials in contact with media related to oil and gas production—Part 2: Elastomers*

JIS C1604 [10], *Resistance thermometer sensors*

MIL-T-24388 [11], *General Specification for Thermocouple and Resistance Temperature Detector Assemblies (Naval Shipboard)*

---

[9] International Organization for Standardization, 1, ch. de la Voie-Creuse, Case postale 56, CH-1211, Geneva 20, Switzerland, www.iso.org.

[10] Japanese Standards Association, 1-24 Akaska 4 Minato-Ku, Tokyo, Japan 107, www.jsa.or.jp.

[11] Naval Sea Systems Command (Ship Systems), Commander Naval Sea Systems Command, Command Standards Executive, 1333 Isaac Hull Avenue SE Stop 5160, Washington Navy Yard, www.navsea.navy.mil.

Provided by : www.spic.ir

Copyright American Petroleum Institute

MSS SP-83 [12], *Class 3000 Steel Pipe Unions Socket Welding and Threaded*

MSS SP-95, *Swage Nipples and Bull Plugs*

MSS SP-99, *Instrument Valves*

MSS SP-105, *Instrument Valves for Code Applications*

NACE MR0103 [13], *Materials Resistant to Sulfide Stress Cracking in Corrosive Petroleum Refining Environments*

NACE MR0175/ISO 15156, *Materials For use In H2S Containing Environments in Oil and Gas Production*

NEMA 250 [14], *Enclosures for Electrical Equipment (1000 Volts Maximum)*

NEMA ICS 5, *Industrial Control and Systems Control-Circuit and Pilot Devices*

NFPA 30 [15], *Flammable and Combustible Liquids Code*

NFPA 70, *National Electrical Code*

PIP PCCIP001 [16], *instrument Piping and Tubing Systems Criteria*

PIP PCFFL000, *Orifice Plate Fabrication Details*

PIP PCIFL100, *Orifice Plate Installation Details*

PIP PCIGN100, *Instrument Pipe Support Installation Details*

PIP PCIGN200, *General Instrument Purge Details*

PIP PCILI100, *Level Transmitter Installation Details*

PIP PCSIP001, *Instrument Tubing Material Specification*

PIP PNC00002, *Abbreviated Piping Terms and Acronyms*

PIP PNSC0035, *Steam Tracing Specification*

SAE ARP4990 [17], *Turbine Flowmeter Fuel Flow Calculations*

SAE J476, *Dryseal Pipe Threads*

SAE J514, *Hydraulic Tube Fittings*

SAE J530, *Automotive Pipe Fittings*

VDI/VDE 3513 Sheet 2 [18], *Variable-Area flowmeters—Maximum permissible errors, G, of the system*

[12] Manufacturers Standardization Society of the Valve and Fittings Industry, Inc., 127 Park Street, NE, Vienna, Virginia 22180-4602, www.mss-hq.com.
[13] NACE International (formerly the National Association of Corrosion Engineers), 1440 South Creek Drive, Houston, Texas 77218-8340, www.nace.org.
[14] National Electrical Manufacturers Association, 1300 North 17th Street, Suite 1752, Rosslyn, Virginia 22209, www.nema.org.
[15] National Fire Protection Association, 1 Batterymarch Park, Quincy, Massachusetts 02169-7471, www.nfpa.org.
[16] Process Industry Practices, 3925 West Braker Lane (R4500), Austin, Texas 78759, www.pip.org.
[17] SAE International, 400 Commonwealth Drive, Warrendale, PA, 15096-0001, www.sae.org.
[18] Verein Deutscher Ingenieure, Postfach 1139, Dusseldorf 1, Germany 4000, www.vdi.de.

Provided by : www.spic.ir

Copyright American Petroleum Institute

3 General

3.1 Introduction

Instruments should meet the needs of the facility. They should be selected to provide satisfactory performance at the process conditions. They should be reliable and robust. Also, the limitations that are listed in their datasheets and instruction manuals should be understood.

Calibration procedures and repair should be taken into account. Maintainability issues include: parts availability, repair difficulty, tools and facilities, decontamination, skills necessary, and diagnostic test capabilities.

3.2 Measurement Terminology

3.2.1
compound range
Range with an elevated zero that has a negative number as its lower range value and a positive number as its upper range value. Often the zero point is placed at mid-scale. This calibration is also referred to as a zero crossing measurement.

3.2.2
elevated zero
Range where the measured variable zero value is greater than the low range value such as occurs with a wet leg differential level transmitter or a bi-directional flow meter. Occasional referred to as *suppressed range*.

3.2.3
lower range limit
Lowest value of the measured variable that a device can be adjusted to measure.

3.2.4
lower range value
Lowest value of the measured variable that a device is adjusted to measure.

3.2.5
range
Region in which a quantity is measured, received, or transmitted. The limits of this region are the lower and upper range values.

3.2.6
span
Absolute algebraic difference between the upper and lower range values. For example, a calibration range of –25 to +5 in. WC represents 30 in. WC of span.

3.2.7
suppressed zero
Range where the measured variable zero value is less than the low range value such as occurs with a dry leg differential level transmitter. Occasional referred to as *elevated range*.

3.2.8
upper range limit
Highest value of the measured variable that a device can be adjusted to measure.

3.2.9
upper range value
Highest value of the measured variable that a device is adjusted to measure.

Provided by : www.spic.ir

Copyright American Petroleum Institute

3.2.10
turndown
Ratio of the sensor's maximum span to the sensor's minimum span. For example a pressure transmitter with a maximum span of 150 psig and a minimum span of 1.5 psig has a 100:1 turndown.

See ISA 51.1-1979, for further information on measurement terminology.

3.3 Instrument Range Selection

3.3.1 Range Requirements

Since uncertainty is dependent on the instrument span the normal operating point is recommended to lie between 50 % and 75 % of the calibrated range and not less than 25 %. The instrument calibrated range should be selected to cover the full operating window. It should be wide enough to cover alternate conditions.

It might not be practical to combine the normal and alternate operating conditions into a single instrument. It should be determined if the operating window can be relaxed or more instruments are needed. It might be acceptable to indicate the measurement during the alternate operating conditions at a lower accuracy. In some instances, it could be justifiable to accept a rough telltale measurement. An example would be using a differential flow meter at 5 % of its normal rate during a startup.

To allow for process changes the upper range limit; i.e. the maximum range, should be selected so the calibrated range can be adjusted upwards by 20 % to 50 %. For compound readings, a similar negative range limit should be provided. Because they increase the measurement uncertainty, the selection of an excessively wide range limits should be avoided.

For clarity the number of significant digits displayed should be minimized. A large measurement range may be divided by 1000 by updating the engineering units on the display. For example, an actual flow of 5,234,567 SCFH could be displayed as 5230 MSCFH. Not more than three significant digits are recommended. When meaningful, additional digits may be provided when additional precision is necessary.

Ideally, the top of scale would have no more than two significant digits with the last significant digit being a five. The possibility of confusion increases as more digits are used.

The display of suppressed zeros; e.g. 100 tons/day to 300 tons/day, should be avoided. A suppressed zero should only be used when needed to improve the resolution of analog displays and gauges. The "at rest position," which is also known as the "self-position," should be readable during startup and shutdown. The calibrated lower range value should represent the zero or sub-zero process value (e.g. 0 tons/day to 150 tons/day, 0 % to 100 % level; 0 psig to 10 psig; –1 psig to 3 psig; 0 °C to 500 °C; –50 °C to 50 °C; etc.)

To facilitate comparisons, safety transmitters should have the same range limits, calibrated range and accuracy as the corresponding process transmitters. Trip settings typically are between 10 % and 90 % of the calibrated range.

The control band should be set within the trip limits. To reduce the likelihood of spurious trips, an operating margin should be established between normal the operating setpoints and the trip setpoints. For instance, when the operational limits are within 20 % to 80 % of range, the trip limits may be within 10 % to 90 % of range. Assigning trip setpoints at 0 % or 100 % of range is not recommended. A slight error could easily mask the trip setpoint on a true trip.

However, in some applications, such as high pressure or low level, it may be advised to adjust the shutdown transmitter to a range focused on the shutdown so as to allow the trip point to stay between 10 % and 90 % of the instrument range.

Provided by : www.spic.ir

Copyright American Petroleum Institute

3.3.2 Units of Measurement and their Presentation

Refineries in the United States mostly use a modified version of U.S. Customary Units or the IP (inch-pound) system. For instance, oil refineries commonly used the barrel (bbl) for hydrocarbons, which is 42 U.S. gallons (158 liters), to represent volume with $bbl_{60°F}$ as the base unit for material balance and display purposes. For fluids whose vapor pressure is greater than atmospheric pressure at 60 °F, they are presented as a liquid at its equilibrium vapor pressure.

Other non-hydrocarbons liquids are mostly represented in gallons (gal) at flowing conditions. The flowing unit for steam is normally expressed as pounds/hour (lbs/h).

Except for steam, gas flow is represented in standard cubic feet per minute (SCFM) with H and D alternatively being used as suffixes rather than M to designate hour and day respectively. API *MPMS* and AGA equations are based upon 101.6 kPa[a] at 15.6 °C (14.73 PSIA at 60 °F) as the base condition but this pressure is not universally recognize and 101.3 kPa[a] (14.696 PSIA) is used in many non API metering and material balance calculations. There is a 0.23 % difference in these two values.

Also, SI prefixes (e.g. k as $\times 10^3$ and M as $\times 10^6$) are used intermittently. Rather, Roman numerals are common scale factors for displays with M is a thousand (10^3) and MM is a million (10^6) which is a thousand squared.

To properly abbreviate and convert these units, API *MPMS* Ch. 15-2001, along with *MPMS* Ch. 1-1994 to define the U.S. Customary Units, should be used. Both U.S. Customary and SI units are shown. Also, NIST *Handbook 44*-2010, Table C.2, is a recognized source for U.S. Customary Unit presentation and use.

The base pressure in the U.S. Customary Unit system is pounds per square inch (psi) with a “g” added to represent measurement relative to atmosphere or “a” suffix measurements taken on an absolute basis. The SI system on the other hand uses the Pascal which is most frequently presented as kPa and the SI only shows a suffix when the measurement basis is not obvious. However, it is common practice when absolute pressure is being measured that the unit is shown as kPa[a]. For higher pressures it is common to use MPa instead of carrying the additional digits needed with the kPa form of notation. In the European Union and other jurisdictions, the Bar is a legally recognized unit and is 100 kPa. Elsewhere, kg/cm^2, which is 98.07 kPa (14.2 psig), remains in use.

When specifying ranges based upon inches of water column (WC), the measurement needs to be defined in terms of the water temperature. The density for water changes with temperature. Most instruments are calibrated to ISA RP2.1-1978, *Manometer Tables*, which is based upon water at 20 °C. Originally, differential flow meters were calibrated to water at 15.6 °C (60 °F). AGA and API metering standards now provide two values with the other being 20 °C. Transposing these two values could lead to a systematic measurement error of 0.081 % or a flow error of 0.04 %. Lastly, some standards used at metrology facilities are based upon the maximum density of water, which occurs at 3.98 °C.

To avoid water density issues for installations that use metric units it is recommended that the mBar or kPa be used rather than millimeters of water. See Table 1 for comparisons of the various based densities and measurement units. See API *MPMS* Ch. 15 for a discussion of the other measurement units that apply to process measurements.

Table 1—Conversion Factors for Inches of Water at Common Base Temperatures

Water Temp.	S.G.	PSI	1/PSI	kPa	mBar
3.98 °C	0.999973	0.0361265	27.6805	0.254344	2.54344
60 °F	0.999015	0.0360920	27.7070	0.254100	2.54100
20 °C	0.998207	0.0360627	27.7295	0.253895	2.53895
Source ISA RP2.1-1978, *Manometer Tables*					

Provided by : www.spic.ir

--`,,,````,,,`,`,`,,`,`,,`,`````,,-`-`,,`,,`,`,,`---

Copyright American Petroleum Institute

3.3.3 Span Limits

Most transducers have an adjustable zero that is on the order of ±10 %, which is intended for minor adjustments due to calibration drift. If a large signal bias exists, a span analysis is necessary to determine if the zero can be suppressed and the range tightened to the degree needed.

For example, a weigh cell system can have a zero or tare value of 1200 Kg (2645 lbs) and a span of 300 Kg (660 lbs). This measurement can only be made if the weigh cell amplifier can be calibrated to these values. The calibration achievable depends on the zero suppression that is achievable, which might be on the order of 80 %, and the span turndown/gain could be 5:1.

Based upon these values, an amplifier with an Upper Range Limit of 1500 Kg (3306 lbs) and a Lower Range Limit of 1200 Kg (2645 lbs) just meets the requirements of this weigh system. Instead, using an amplifier with 90 % zero suppression and a 10:1 turndown together with an Upper Range Limit of 2000 Kg (4409 lbs) provides the flexibility necessary to adjust the tare value. If a 90 % zero suppression is not available, the other alternative is widening the span and losing some accuracy.

A typical differential pressure transmitter can achieve 99 % zero elevation/suppression and has a 100:1 turndown which allows sufficient adjustability for almost all level measurements. In contrast, some analog transmitters have a 5:1 turndown with a zero elevation/suppression of 80 %. This can present a calibration problem for a wet leg level transmitter that is mounted well below the lower nozzle or have an upper tap that is significantly higher than the maximum liquid level, especially if the fill fluid specific gravity is greater than the process liquid.

3.4 Instrument Selection

The instrument selection process involves the following five steps.

1) Identify the expected operating cases such as:

   a) normal flow;

   b) batch cycles;

   c) standby/recycle flow;

   d) regeneration;

   e) start-up;

   f) shutdown;

   g) upsets and emergencies.

2) Collect the following process data:

   a) fluid name;

   b) phase;

   c) flow rate;

   d) pressure;

   e) temperature;

Provided by : www.spic.ir

Copyright American Petroleum Institute

f) density/molecular weight;

g) viscosity.

3) Identify and collect additional information such as:

a) vapor pressure;

b) dielectric;

c) corrosiveness;

d) erosion characteristics;

e) toxicity;

f) solids and contaminants;

g) foaming;

h) depositing;

i) solidification; e.g. coking;

j) reactivity;

k) hydraulic pulsations;

l) bi-directional flow;

m) backflow risk;

n) vibration.

4) Determine the range and accuracy needed to meet the requirements.

5) Select the instrument type based upon the following:

a) device survivability and long term reliability;

b) mechanical integrity requirements;

c) materials of construction including soft goods;

d) process connections and isolation valves;

e) heating and insulation requirements;

f) location and accessibility;

g) purging and flushing needs;

h) electrical noise resistance;

i) wiring and power supply needs;

Provided by : www.spic.ir

Copyright American Petroleum Institute

j) electrical classifications;

k) safety integrity level needed;

l) certifications and markings;

m) safety and environmental conditions;

n) existing instruments;

o) expertise and training requirements;

p) calibration facilities;

q) expendables disposal;

r) failure modes;

s) maintenance and sparing needs;

t) self-diagnostic and self-documenting features;

u) life cycle effectiveness.

3.5 Mechanical Integrity

For mechanical integrity the design pressure and temperature should be defined at the same conditions. In some cases two sets of pressure and temperature might be needed: the maximum pressure with its associated temperature, and the maximum temperature with its associated pressure.

3.6 Metallurgy and Soft Goods Selection

3.6.1 Introduction

Materials should be selected based upon the process requirements and their historical performance. In refining there are services where additional care is needed:

— Hydrogen Sulfide attack in wet services;

— chloride stress corrosion with stainless steels;

— acid attack;

— hydrogen permeation.

Materials have temperature and concentration ranges where they are applicable. They could become problematic operating outside these areas. Metallurgy and soft goods selection includes the following considerations:

— operating, maximum and minimum temperature;

— maximum pressure;

— the fluid composition, including contaminates;

— external ambient effects; e.g. exposure to small quantities of corrosives.

Provided by : www.spic.ir

Copyright American Petroleum Institute

3.6.2 Wetted Materials

Pressure measurement elements (i.e. bellows and Bourdon tubes) are essentially thin wall springs. Corrosion changes their dimensions which affects their mechanical properties. In some situations loss of containment can occur. (See 8.3 g for suggestions to mitigate this hazard.) Suppliers and experienced corrosion engineers should be consulted to select the optimum materials. Also, see API 571 for guidance.

AISI Type 316 Stainless Steel is the most commonly used material for measuring elements and tubing. Wetted instrument parts are often upgraded to improve corrosion resistance, increase flexibility or minimize spare part requirements. AISI Type 316 Stainless Steel is often used where carbon steel would otherwise be acceptable.

Also, to eliminate painting, stainless steel is often used. Brass is acceptable for air, un-contaminated water, and inert gases, but is often avoided to retain interchangeability and avoid potential confusion. One issue with regards to stainless steel pipe fittings and flanges is that at temperatures ≤425 °C (800 °F), its strength is inferior to carbon steel.

The use of AISI Type 304 Stainless Steel is not recommended. It is not a standard material for the construction of instruments. Except for resistance to nitric acid, it is inferior to AISI Type 316 Stainless Steel and it has no price advantage. Conversely, AISI Type 316 Stainless Steel provides flexibility and avoids mix ups.

However, aqueous chloride environments can promote pitting and stress corrosion cracking of 300 Series Stainless Steels that are cold worked or subject to external tensile stress. Cracking usually occurs at metal temperatures above 60 °C (140 °F), but a few instances have been reported at lower temperatures. The presence of dissolved oxygen increases the propensity for cracking. In particular, bellows and instrument tubing contaminated with chlorides can be affected.

It is recommended that stainless steel not be used with chlorine, aliphatic amines and ammonium containing compounds. To avoid issues with chlorides, especially in near shore environments, N08825 is being used as a replacement for stainless steel tubing and other piping components. To ensure that enough Molybdenum (≥2.5 %) is provided, i316LM or 317SS should be considered for marine environments. Their hardness should be less than 80 Rb. When chloride or hydrogen sulfide concerns exist carbon steel bodies with N06022 measuring elements should be considered over stainless steel construction.

3.6.3 Material Codes

Common stainless steels (e.g. Type 316) are designed by AISI type designations regardless of their form (plate, casting, forging, etc.). Their composition and AISI type designation is defined in ASTM A240-2013.

Issues can occur when specifying materials of construction using registered trademarks and brand names. It is recommended that the UNS material code from ASTM DS561 or the plastic code from ASTM D1600 and ASTM D1418 be used with the trade name to avoid procurement complications. Additionally, some trade names refer to more than one product. For instance Teflon® is a group of fluorocarbon compounds.

Below are some common trade names and their generic identifiers:

Trade Name	UNS
Nickel	N02200
Nickel 200	N02200
Nickel 201	N02201
MONEL® Alloy 400	N04400
MONEL® Alloy R-405	N04405
MONEL® Alloy K-500	N05500
HASTELLOY® Alloy X (HX)	N06002

Provided by : www.spic.ir

Copyright American Petroleum Institute

Trade Name	UNS
HASTELLOY C-22	N06022
HASTELLOY® Alloy C-22®	N06022
INCONEL® Alloy 600	N06600
INCONEL® Alloy 601	N06601
INCONEL® Alloy 718	N07718
CARPENTER® Alloy 20Cb-3®	N08020
INCOLOY® Alloy 800HT	N08811
INCOLOY® Alloy 800H	N08811
Alloy 825	N08825
INCOLOY 825	N08825
904L SS	N08904
HASTELLOY B	N10001
HASTELLOY C	N10002
HASTELLOY® Alloy C-276	N10276
HASTELLOY® Alloy B-2	N10665
Tantalum	R05200
STELLITE Alloy 6B (Co-Cr-W)	R30016
HAYNES® Alloy 25	R30605
Titanium Grade 2	R50400
Titanium Grade 4	R50700
Zirconium 702	R60702
17-4PH	S17400
NITRONIC® 50 (XM-19)	S20910
18-8PH	S30100
301 SS	S30100
304 SS	S30400
304L SS	S30403
304H SS	S30409
304LN SS	S30453
305 SS	S30500
316 SS	S31600
316/316L	S31600/S31603
316L SS	S31603
316Ti SS	S31635
317L SS	S31703
321 SS	S32100
321 SS	S32100
321H SS	S32109
SAF 2507™ Super Duplex	S32750
347 SS	S34700
409 SS	S40900
410 SS	S41000
430 SS	S43000
440A SS	S44002
440B SS	S44003

Provided by : www.spic.ir

Copyright American Petroleum Institute

Trade Name	UNS
440C SS	S44004
440F SS	S44020

Trade Name	D1600/D1418
DELRIN	POM
Kalrez®	FFKM
Kel-F®	PCTFE
Kynar	PVDF
Neoprene	CR
Nitrile Rubber	NBR
PEEK	PEEK
Teflon	FEP
Teflon	PFA
Teflon	PTFE
Tefzel	ETFE
Viton®	FKM

ASTM designations such as those listed in ASME B31.3 are also an acceptable means of identifying materials. It should be understood that ASTM designations specify more than the composition of the material, but also cover their form (i.e. cast, forged, plate, bar, etc.).

3.6.4 Soft Goods

Instruments rely on o-rings and special gaskets to seal their components. Selecting an elastomer is not a straight forward process. For instance, though used extensively as an instrument o-ring, FKM is not acceptable for Amines or hot water and steam. Elastomers fail in different manners: some swell, some dissolve, and some take a compression set.

Various charts and technical reports are available from elastomer suppliers that grade the degree of compatibility. Still, different compounds or grades exist within a D1600/D1418 designation with different capabilities. Actual use with a particular fluid at the same concentration and temperature is the best guide.

An elastomer's maximum temperature, typically from 100 °C to 232 °C (212 °F to 450 °F), is a limiting factor in instrument applications. FFKM, a perfluoroelastomer, is an exception to these limitations; it is operable to 315 °C (600 °F) and some grades are resistant to steam.

Explosive Decompression (ED) can occur when an elastomer absorbs process vapor and the pressure is abruptly released. A seal can become damaged as a result and will be unable to hold pressure afterwards. EN 682, *Non-metallic Elastomers for Oil and Gas Production*, and ISO 23936, *Non-metallic Elastomers for Oil and Gas Production*, Table C.1, are the standards that cover the selection and evaluation of elastomeric seals for explosive decompression.

3.6.5 NACE

3.6.5.1 General

The NACE standards were developed to protect against catastrophic failure from sulfide stress cracking (SSC) due to H_2S. Materials in aqueous environments containing H_2S can crack under the influence of internal strains, which is usually measured by hardness. Hard materials are more susceptible to SSC than softer materials.

Provided by : www.spic.ir

Copyright American Petroleum Institute

NACE MR0103, and NACE MR0175, are the two commonly used NACE standards used for H_2S bearing hydrocarbon services.

3.6.5.2 NACE MR0175/ISO15156

NACE MR0175, which is the original sour service standard, was written to address H_2S in low pH environments, and applies to petroleum production, drilling, gathering, and gas field processing facilities. NACE MR0175/ISO 15156-2009 dictates materials based on the severity of the sour service and pH. Materials not listed may be used, but require testing according to NACE guidelines. There is a range of concentrations and pressures for the various materials. For many materials, a simple statement that it is NACE MR0175 compliant is not adequate. AISI Type 316 Stainless Steel use is allowed for instruments and control devices, but environmental conditions, specifically the chloride concentration should be within the guidelines of Appendix A of Part 3.

The notes from Table A.6 of MR0175/ISO 15156-2009 state for “instrumentation and control devices that include but are not limited to diaphragms, pressure measuring devices, and pressure seals.” The material “should be in the solution-annealed and quenched, or annealed and stabilized heat-treatment condition; be free of cold work intended to enhance their mechanical properties; and have a maximum hardness of 22 HRC.” Further, “These materials have been used for these components without restriction on temperature, P_{H2S}, Cl-, or in situ pH in production environments. No limits on individual parameters are set, but some combinations of the values of these parameters might not be acceptable.”

3.6.5.3 NACE MR0103

NACE MR0103-2009 is intended to address sulfide stress cracking in the alkaline environments normally associated with downstream facilities (e.g. refineries). NACE MR0103 provides hardness limits for materials that have been found acceptable for wet sour service. Carbon and low-alloy steels should have a maximum hardness limit of 22 HRC (237 Brinell.) Additionally, it may call for heat treatment depending on the fabrication history. 300 series austenitic stainless steels are acceptable with hardness values less than 22 HRC (Rockwell C Hardness.) Higher alloyed stainless steel grades are acceptable up to 35 HRC.

Some hardenable nickel alloys are acceptable for applications requiring higher strength or a hardness up to 40 HRC. The standard does permit the use of ASTM A193 Grade B7 bolts when they are not exposed to the process, buried or encapsulated. They are satisfactory for most external flanged joints exposed to the atmosphere. Alternate bolting could be necessary for transmitter bodies mounted in instrument enclosures.

3.6.6 Hydrogen Services

Hydrogen permeation presents a difficult problem for diaphragm based devices. Hydrogen ions (i.e. protons) are formed by galvanic action between dissimilar metals or surface corrosion at the diaphragm. Due to its small size, the hydrogen ion migrates through the metal diaphragm. Once on the other side, it recombines forming a diatomic molecule that cannot re-cross the diaphragm. Instead it becomes trapped in the fill fluid. This problem manifests itself when the process pressure is dropped below the hydrogen vapor pressure causing the diaphragms to inflate. At that point the transmitter output freezes or drops to zero.

Gold plating on stainless steel diaphragm seals helps control this problem. It reduces the permeability of the diaphragm. Stainless steel is the least material affected and is the preferred base material. On the other hand, tantalum is prone to hydrogen embrittlement and should not be used. Gold plating should be considered with the following conditions:

— wet hydrogen service;

— hydrogen in corrosive environments;

Provided by : www.spic.ir

--`,,`````,,,,`,,`,`,,,,`,,`````,,-`-`,,`,,`,`,,`---

Copyright American Petroleum Institute

— hydrogen partial pressure ≥621 kPa (90 PSIA);

— for a transmitter temperature ≥43 °C (110 °F) when any hydrogen is present.

Some extremely difficult applications could require using diaphragm seals that have thicker gold plating, but the quality of the coating is more important. Gold platting also increases the general corrosion resistance of the diaphragm.

The following recommendations apply to hydrogen services.

a) Do not use electro-plated material (e.g. cadmium) or galvanized fittings that are electrically near the transmitter; i.e. a short conductive path.

b) The transmitter body flanges, bypass manifolds, and pipe fittings should be stainless steel.

c) Install the transmitter process connections facing downward so moisture does not collect on the diaphragm.

d) The impulse line length should allow the transmitter to cool to ambient conditions.

e) Use a sunscreen to reduce the transmitter's ambient temperature.

Hydrogen attack can be completely avoided if the transmitters use impulse tubing with liquid seals to prevent its exposure to the process vapors. See 9.3 concerning the selection and use of liquid seals.

3.6.7 Liquid Metal Embrittlement

Liquid metal embrittlement is described as a sudden reduction in rupture strength when low melting point metal enters the grain boundaries. The grain boundaries are weakened and can fail catastrophically under tensile load.

Mercury use is prohibited due to its health effects. It also has the ability to cause liquid metal embrittlement. This affects various materials containing copper such as N04400, N06600, and brass.

Cadmium plated fasteners should be completely avoided. Cadmium can lead to liquid metal embrittlement while in contact with steel or other materials. Cracks have been found at 90 % of the yield stress of steel at 204 °C (400 °F). This effect is compounded by bolt and nut threads which are crack starters. Furthermore, cadmium emits toxic fumes at 232 °C (450 °F).

Austenitic stainless steels can become contaminated by zinc at 400 °C (750 °F). Zinc coated items, such as instrument stands should not come into contact with high temperature stainless steel pipe and equipment. Galvanized structures, zinc chromate paint, and the like should not be located where molten zinc from a fire can fall on stainless steel pipes.

3.7 Signal Transmission and Communications

Historically analog technologies (i.e. voltage, current, and pneumatic) were used to transmit measurements. Analog technology continues to be used but in many applications digital communications (e.g. HART, Fieldbus, Wireless, Ethernet, etc.) have replaced these technologies.

3.7.1 Electronic Analog Signals

Electronic analog transmission technology communicates a measurement or command using dedicated wires. The signal value can be an analog value using current or voltage.

Provided by : www.spic.ir

Copyright American Petroleum Institute

The most common analog signal is a 4-20 mA signal defined according to ANSI/ISA S50.00.01 and IEC 60381-1. The standard 4-20 mA signal has been extended by NAMUR NE-43 to provided diagnostic information. Table 2 shows the signal level interpretations for devices that conform to NAMUR NE-43 requirements.

Typically, transmitter failures are indicated by one signal level which is often user selectable. To indicate failure the signal is either less than 3.8 mA or greater than 20.5 mA.

Table 2—Output Signal, mA

Normal	4 to 20.0
Normal under range	3.8 to 4.0
Normal over range	20.0 to 20.5
Transmitter failure	3.6 to 3.8
Transmitter failure	20.5 to 22.0
Probable open field wire	0 to 3.6
Probable shorted field wire	≥22.0

A 4-20 mA signal is provided in several formats. There are two, three, and four wire configurations. There are three levels of load impedances (L, H, and U) that a device should be capable of driving. The lowest acceptable value is ISA Class L impedance, which is 300 ohms. The standard impedance of an input is 250 ohms. This leaves 50 ohms for wire and a possible low impedance local meter or test instrument. Most instruments are capable of driving 550 ohms or more. This enables the instrument to be operated with two control or monitoring devices in series.

Two wire instruments receive their power from the signal wires. Three and four wire instruments use the third and fourth wires for power. Almost all process pressure based transmitters and EMF/electrical transducers as well as several types of inline flow meters and level transmitters are “Full Isolated” ISA 2U devices according to ISA S50.00.01. They are two wire devices using a 24 VDC nominal power supply with its power, output, and electrical signal input terminals electrically isolated from each other and ground, and can drive a 550 ohm load with a 24 VDC power supply.

Four wire devices are used for measurements that require more than the nominal fifty milliwatts that are provided to two wire devices by the signal wires. These typically are ISA 4H devices; i.e. they can drive more than 800 ohms of load and have an active output. However, many of these devices are not isolated. This is often not acceptable, so further signal conditioning is needed. Further, if not taken care of by a signal conditioner, a different combination of connection points can be necessary when terminating the device onto the facility control system.

3.7.2 Pneumatic Signals

Pneumatic systems designed according to IEC 60382 or ISA S7.4 use a 20 to 100 kPa or a 3 psig to 15 psig signals respectively. Some pneumatic field instruments, particularly temperature transmitters, are difficult to calibrate since the zero and span adjustments interact.

Most control systems based entirely upon pneumatic technology are considered to be legacies. Outside of control valve actuators and their accessories, pneumatic systems based upon pneumatic signals are limited to remote valve and metering stations associated with gas pipelines, gathering systems, etc. that do not have a reliable electrical power system and use pipeline gas to operate the logic and measurement devices.

Provided by : www.spic.ir

Copyright American Petroleum Institute

Pneumatic devices are used also in utility services where it is not effective to provide remote control and continuous surveillance is unnecessary. They are used to regulate pressure, temperature and level. Pneumatic controllers are used in the following services.

a) The setpoint point is beyond the range of a self-contained regulator.

b) Closer control is needed than is achievable by a regulator.

c) The pressure drop is too small for a self-contained regulator.

d) The materials of construction needed are unavailable with a regulator.

e) Extra thrust is needed to ensure the valve opens after prolonged shutoff.

f) Extreme pressure reduction is needed across a single stage.

Pneumatic level controls are integral with a measurement displacer. Local pneumatic level displacer controllers are actively used for condensate drums, knockout pots, and the like.

Large case pneumatic controllers for pressure and temperature can be mounted on a valve actuator, a pipe stand, or a local panel.

3.7.3 Digital Signals

Digital communications use the full capabilities of intelligent devices to improve accuracy and reliability, while reducing maintenance. This technology allows a convenient connection to the facility control system. Digital communications also allow multiple devices to share one wire pair, reducing wiring needs.

Digital communications facilitates measurements by providing better information. For instance the resolution of the measured variable is not limited by the transmitter’s 12 bit D/A converter. This allows the measured variable to be transmitted as a floating point value in engineering units without regard to scaling. The entire measurement capability of the transmitter is utilized.

Several standards exist to enable digital communications with field instruments. IEC 61158-3-1 and IEC 61158-4-1, or H1 Foundation Fieldbus is widely used for process measurement by the refining and petrochemical industry. It is supported by the major process instrument suppliers.

The HART Protocol is also widely supported. It has evolved from being a FSK signal multiplexed on the 4-20 mA signal. It can be transmitted by a multi-drop network and wirelessly as well as other methods.

Refer to API 552 for further information on digital communications as well as the transmission of analog signals. Also see IEC 61784-1 for a more extensive description of communication protocols available for industrial communications.

3.8 Power, Grounding, and Isolation

3.8.1 Power

A variety of power sources are available depending upon the instrument. The more common power methods are:

a) type 2U loop powered according to ISA S50.00.01;

b) type 4H DC or AC power according to ISA S50.00.01;

Provided by : www.spic.ir

Copyright American Petroleum Institute

c) network power such as provided by a fieldbus;

d) internal batteries.

Power for four wire devices can be power by either a nominal 24 VDC power supply or an AC power source. While some older designs still operate at 120 VAC or 240 VAC nominal voltage levels, most AC power devices being marketed are global products that accept voltages between 95 volts and 240 volts and 50 Hz to 60 Hz.

Most four wire devices have a 24 VDC option. For externally powered instruments, this is the preferred method of providing power. Still, it should be understood that distance limitations apply for transmitting power. In an oil refining or petrochemical facility, 180 meter or six hundred foot wire runs can be expected; this combined with a nominal 15 % voltage drop only allows loads up to 7 watts on a 18 AWG or 1.0 mm^2 metric wire pair in a multi-core cable. Loads above this value can require a heavier gauge wire or AC power from a UPS field panel. The latter often can be preferable since it avoids special cables. A locally mounted DC/DC power converter can also resolve voltage drop issues by boosting the voltage at the device.

3.8.2 Grounding

Grounding for instruments has two considerations. Grounding according to electric safety codes is the first consideration. The second is to ensure an accurate, low noise reading. This involves wiring at both the instrument and the control system. Almost without exception, multiple grounds can be not tolerated; this is a major source of electrical noise.

NOTE See IEC 61000-5.2, IEEE 1050, API 552, and NAMUR NE 98 for further information regarding grounding and electrical noise reduction.

3.8.3 Isolation and Surge Protection

Instruments need to be protected from stray electrical potentials and should not become a source of ground loops. They should be fully isolated according to ISA S50.00.01 requirements. A minimum dielectric strength of 500 VAC from ground and between isolated circuits is recommended. The requirements of IEEE C37.90-2005 Section 8.2 should be met, or pass IEC 61298-2-2008 Sections 6.3.2 and 6.3.3 testing with no measurable loss of resistance or a flash over.

In areas that are electrically active (e.g. near switch yards) or receive intense lightning, surge protectors should be provided with the transmitter. In these cases they should meet the requirements of IEEE C37.90.1 and Category B of IEEE C62.41 as tested according to IEC 60770-1.

3.9 Local Indicators

3.9.1 General

Local indicators are provided to assist field personnel. These indications can be a direct connected gauge or an electronic device. Changes resulting from adjustments to a local valve, etc. should be observable from the local readout. For instance, for control valve maintenance it is common practice to provide a local indicator visible from the control valve bypass.

3.9.2 Direct Connect Gauges

Pressure gauges, bi-metal thermometers, and local level indicators are often used as direct connected indicators. Typically, they require no external power but they are imprecise and have limited long term reliability.

Provided by : www.spic.ir

Copyright American Petroleum Institute

Given their accuracy limitations, direct process indicators should not be used to calibrate transmitters. The following recommendations apply.

a) Direct connected process pressure gauges should be provided for pressure switches and regulators.

b) According to ASME Section I, boiler drums need a visible pressure gauge with an upper range value approximately double the safety valve setpoint [19].

c) Rather than a local temperature indicator, a transmitter with an integral indicator for manual operation of a control valve has been found to be effective and easier to locate.

d) Direct connected flow indicators larger than 2 in. NPS are not practical, rather electronic indicators are used. Battery powered wireless transmitters with LCD indicators can be used for local indication for services like furnace steam air decoking flow control where only local indication is necessary. (A wireless gateway is not necessary, these devices can operate independently.)

e) Direct connected local level Indicators should be located on vessels so that they are visible from the aisles or platforms.

Other than being used as a pump run indicator, continuously online pressure gauges offer little value. Local dial indicators are prone to damage and calibration errors. Generally they do not provide a significant benefit once their total installation is evaluated. This is particularly true once startup has been completed. Many facilities consider them as disposable items and replace them only when needed. Rather, the use of blind pressure taps and test wells is recommended. However, decontamination and reuse can be an issue with temporary pressure gauges.

3.9.3 Local Electronic Indicators

Electronic indicators can be provided using the signal from the process transmitter. They can be integral with the transmitter or remotely mounted. They can operate off the 4-20mA signal from the transmitter. Typically, the drop is less than one volt so they do not burden the loop significantly. They have either an analog or digital display. Digital displays are easily configured to display engineering units. Analog meters require a custom scale often from a custom dial fabricator to obtain direct readings in engineering units.

Fieldbus transmitters can be equipped with integral indicators or these indicators can be mounted remotely and wired back to the transmitter. Independent fieldbus indicators are an option. These displays can display more than one value and perform calculations but they count as at least one device and contribute to the link loading.

3.10 Tagging and Nameplates

Instrument tagging, preferably at the time of shipment, should be provided. ASTM F992, with a Type III (Type 316 stainless steel, engraved), Grade B (metal strapping or screw), Class 3 (≥20 gauge or 0.5 mm), Size A (rectangular 50 mm by 20 mm or rectangular 2 in. by $^{7}/_{8}$ in.), Letter Size 4 ($^{1}/_{8}$ in. or 3 mm) nameplate is recommended. The nameplates should be attached with 18 AWG (1.0 mm^2) UNS N04400 tie wire, austenitic stainless steel screws, austenitic stainless steel cable ties, or banding.

Laser engraving is recommended and is a standard technique for producing stainless steel tags.

Laminated nameplates should be fabricated from UV resistant HDPE or PMMA marine-grade plastic such as an UVA acrylic. The engraving should use medium Helvetica letters, or another sans-serif typeface, at least 4 mm high

[19] At least one block valve is necessary. An additional valve may be provided near the drum as long as it is locked open. The installation has to be designed so that it can be blown out. Blowdown valves should be the multi-turn type. Also a siphon or equivalent device is needed to maintain a water seal. See ASME B31.1-2012 paragraph 122.3 and BPVC Section 1-2013 paragraph PG-60.6 for further information.

Provided by : www.spic.ir

Copyright American Petroleum Institute

showing the instrument tag number and the service description. Nameplates with black and other dark surfaces should be avoided otherwise the contrast between the surface and the description is lost and becomes unreadable. Nameplates should be attached with waterproof, solvent resistant, high strength, temperature resistant cement, such as a two-step acrylic structural adhesive.

As a minimum, the nameplate should have the full ISA 5.1 tag number including any unit prefix. Additional information such as purchase order, service, etc. is added as desired. Also, thermowells should be stamped with the tag number of its corresponding temperature element. Abbreviations should be derived in the following order: Plant Standards, ISA RP60.6, PIP PNC00002, and ASME Y14.38.

3.11 Configuration and Configuration Management

Many measurement devices are configurable to different functions and have user set parameters. As a minimum, it is recommended that the full tag number be configured in the device, preferably at the time of shipment but no later than prior to installation. While selecting configurable devices, the user should acquire the necessary tools and software as well. The devices used to perform this configuration include:

a) handheld configurators using either direct wiring, infrared, etc.;

b) personal computers that use general or device specific programs and interfaces;

c) process control system configuration interfaces;

d) instrument interfaces; e.g. digital displays.

Procedures should be provided for configuration data retention besides the device itself.

NOTE See API 554, Part 2 for further discussion of configuration management.

3.12 Documentation

Information about the instrument is typically documented on data sheets; e.g. ISA TR20.00.01 forms or drawings. Complex instrumentation often involves more detailed documentation such as a written specification. See PIP PCEDO001, *Guidelines for Control Systems Documentation*, and ISA RP60.4, for typical project documentation requirements. Also available is ISA TR 77.70.01, *Tracking and Reporting of Instrument and Control Data*, and ISA 5.06.01, *Functional Requirements Documentation for Control Software Applications*. Central Instrument database software can be a useful tool for maintaining this information and making it widely available.

Complete instrument documentation is critical for maintenance. Regulations concerning the Management of Change (MOC) require an evaluation and documentation of the process, mechanical, and operating changes. This extends as well to the instruments and their wiring.

System integrity standards (e.g. ISA 84.00.01 Part 1) require the information that validated the system be maintained. This includes instrument data sheets and similar documentation. Compliance with these standards can be mandatory.

4 Temperature

4.1 Introduction

This section covers the installation and selection of devices for measuring temperature in refinery services. Thermowells and temperature sensors are covered as well as wiring, signal conditioning, and local indicators.

Provided by : www.spic.ir

Copyright American Petroleum Institute

4.2 Thermowells

4.2.1 General

Thermowells are used to protect the temperature elements and to allow their replacement during operation.

Installing temperature elements in thermowells adds time lag and errors to the measurement. However, by using a spring loaded fitting so the element firmly contacts the bottom of the thermowell the measurement lags and errors are reduced. For temperatures above 290 °C (550 °F), N07718 springs should be considered.

Only in special situations such as furnace ducts are sheathed elements installed directly in the process to obtain a faster response. However, in these cases a distinct nameplate should be furnished warning that extraction could cause a process release. To prevent inadvertently removing the element, a tack weld, cotter pin, or car sealed locking fitting is recommended.

4.2.2 Thermowell Terminology

The insertion length, U, (see Figure 1) is the distance from the free end of the thermowell up to the threads, flange face, or means of attachment. The immersion length is the length of the thermowell that protrudes into the process fluid past the edge of the pipe or vessel. The lagging extension, T, is the additional section added to thermowells to extent it beyond pipe insulation. ASME B40.9 provides further information concerning about thermowell terminology.

4.2.3 Measurement Error Reduction

Temperature measurement errors include heating of the thermowell by fluid impingement, thermal radiation errors, and heat transfer between the thermowell and the surrounding fluid. Heat transfer errors occur because heat is conducted along the length of the thermowell from the process fluid at the tip to the atmosphere. The element is part of this gradient so it is not measuring the process temperature but an intermediate temperature.

The higher the temperature and lower the density and fluid velocity, the greater the error. Normally, with insulated pipe and fully turbulent flow conduction errors are small. However, lines with low densities and flow rates (e.g. furnace stacks) with standard length thermowells can have significant errors. With short thermowells on high temperature lines greater than 480 °C (900 °F), these errors can be >28 °C (50 °F). With moderate temperature liquids, less than 93 °C (200 °F), a minimum immersion length of 50 mm (2 in.) is recommended. The thermowell tip should not be inside the edge of the nozzle. The tip should always be in contact with the flow stream.

Longer thinner thermowells decrease these errors by reducing the thermal conductivity, but at the expense of strength. The element design also plays a role. Heavily insulating the nozzle, flange, and the exposed end of the thermowell is recommended for high temperature services such as furnace outlets.

RTDs and local temperature indicators need to extend further than the thermocouple and thermistors to be fully inserted into the flowing stream. For instance a typical RTD element is 15 mm (0.6 in.) long, while a bimetal thermometer element can be 62 mm ($2^1/_2$ in.) long.

Further guidance on minimizing measurement errors in thermowell applications is found in ASME PTC 19.3.

4.2.4 Thermowell Strength

The optimum immersion length is a tradeoff between accuracy and response time with mechanical strength requirements. See Figure 2 for a typical thermowell installation.

Thermowells vibrate as their natural frequency is approached. This causes them to eventually fracture and fail. Thermowells have been known to fail within minutes upon being subjected to destructive vibration. On the other hand,

Provided by : www.spic.ir

Copyright American Petroleum Institute

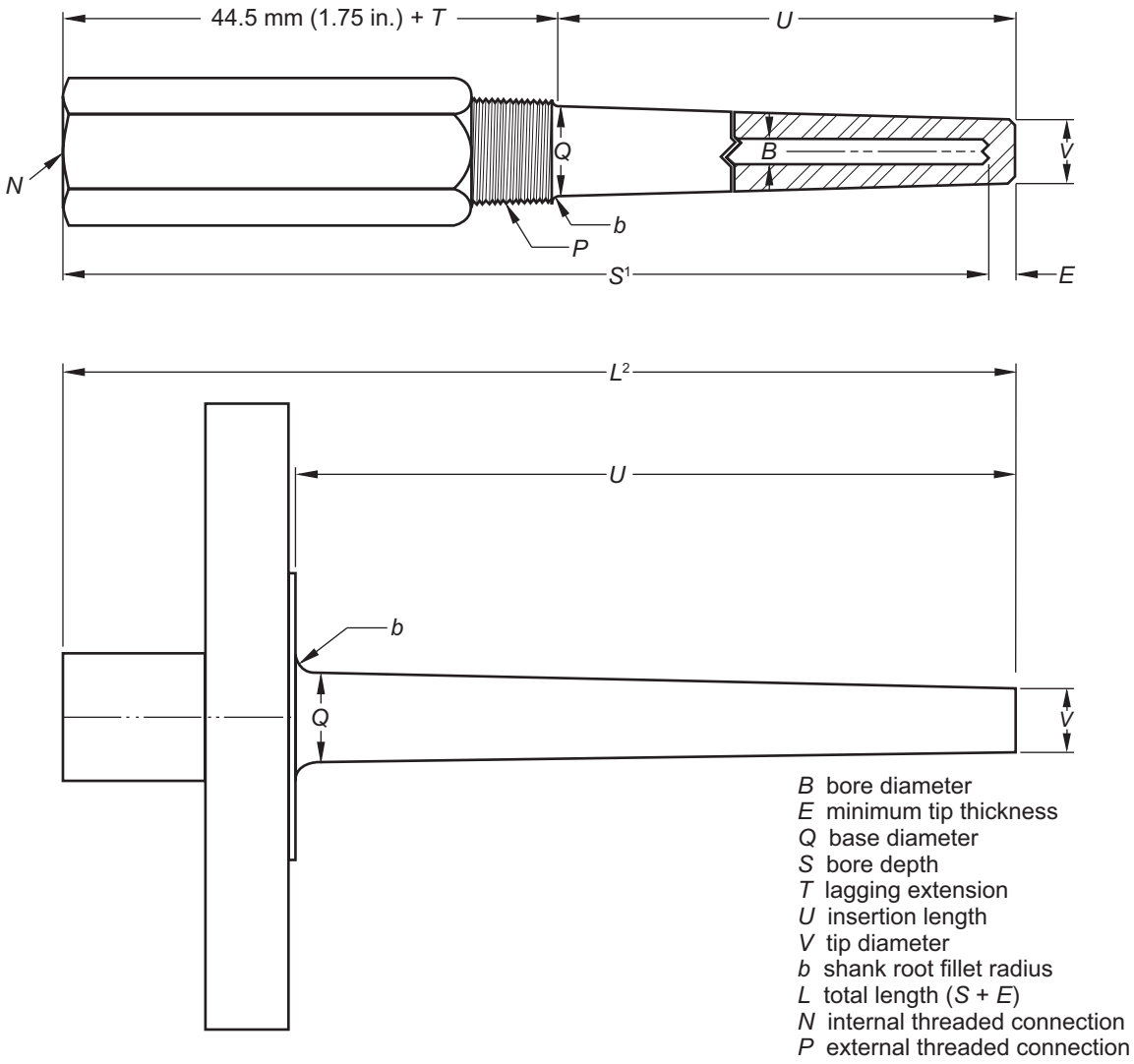

NOTE 1 9 in. ASME B40.9 threaded themowell with lagging extension shown.

NOTE 2 9 in. ASME B40.9 flanged themowell with $1^1/_2$ NPS Class 300 flange shown.

Figure 1—Thermowell Terminology

some damped thermowells have operated in the locked-in frequency zone for extended periods prior to fatigue failure. Lastly, there are cases where failure has not occurred.

Thermowells are also subjected to steady state bending loads caused by the high velocity, high density flow. Consequently, thermowells should be evaluated and documented for these failure modes.

ASME Performance Test Code PTC 19.3 TW provides information and calculation procedures for thermowells. It is a design standard for tapered, straight, and stepped-shank thermowells. However, thermowells manufactured from pipe or other materials are outside its scope. ASME PTC 19.3 TW evaluates the forces caused by external pressure and the combination of steady-drag forces and dynamic forces including oscillating-drag or in-line forces and oscillating-lift or transverse forces that result from fluid impingement.

In those instances where an adequate measurement is not possible based upon the design requirements of ASME PTC 19.3 TW, a highly damped solution might be arrived at using computational fluid dynamics. For configurations

Provided by : www.spic.ir

Copyright American Petroleum Institute

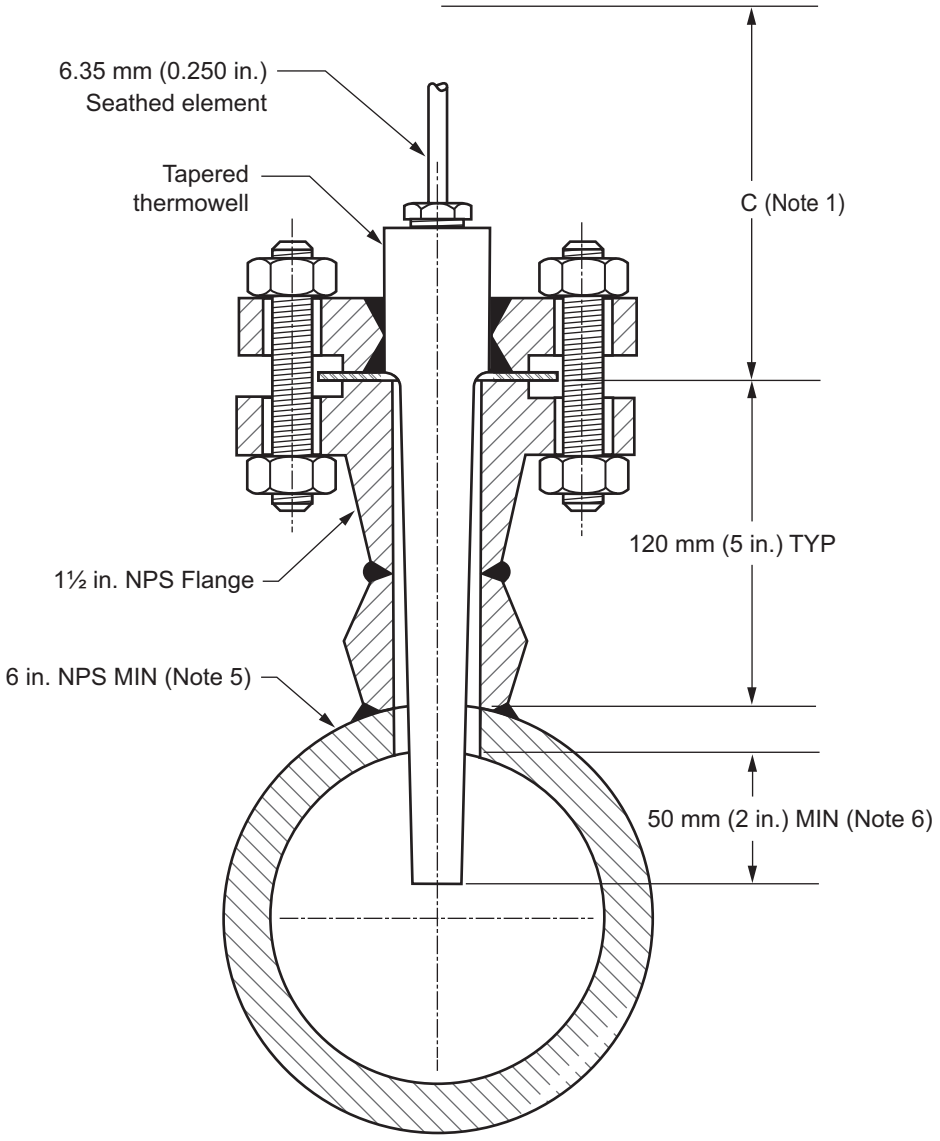

NOTE 1 To allow well removal, Dimension C should be 610 mm (24 in.) or the total length of the thermowell plus 76 mm (3 in.), whichever is greater.

NOTE 2 To prevent pockets, eccentric reducers should be provided on horizontal pipe.

NOTE 3 The inside diameter of the branch connection should ≥1 in.

NOTE 4 In non-cryogenic services the thermowell preferably is installed on the top of the pipe. For cryogenic liquids to avoid trapping vapors it is recommended that the well be located in the arc from the horizontal plane to 45° below that point.

NOTE 5 Minimum pipe size can vary with the depth of the nozzle and the length of the well plus the length of the well selected. See PIP PNF0200 concerning process pipe connections.

NOTE 6 To allow for the element length, the minimum depth for an RTD's and Bimetal indicators should be 75 mm (3 in.).

Figure 2—Thermowell Installation

Provided by : www.spic.ir

Copyright American Petroleum Institute

not covered by ASME PTC 19.3 TW, or for a more precise determination of the velocity limits, the use of finite element analysis (FEA) and computational fluid dynamics (CFD) can be considered. These models should be validated according to ASME V V20.

The use of support collars is not recommended and is outside the scope of ASME PTC 19.3 TW. An interference fit (i.e. a press type fit) is needed which is difficult to maintain, particularly when differential thermal growth and corrosion is considered. Further, since it is not a standard shape, a CFD analysis is needed. Rather, welded thermowells or studding outlets as shown in Figure 4 can be used to ensure that the thermowell has an adequate projection into the process.

Installing thermowells at a 45° angle increases its effective length and lowers the bending stress at the root. However, tip effects are important and the Strouhal number varies with the flow angle with the thermowell axis so there is no established method short of using a CFD evaluation for determining a velocity reduction factor. Also, a thermowell mounted in an elbow pointing into the flow is not covered by the standard.

If flow lines are closely parallel to the thermowell tip as when it is installed in an elbow pointing away from the flow, there is minimal transverse flow near the thermowell tip. This results in a bending moment reduction but ASME PTC 19.3 TW assesses these orientations conservatively, treating them no differently than a perpendicular installation and provides no credit for this configuration.

Additional precautions are recommended for thermowells subject to impact by solids such as would occur during furnace decoking or spalling.

4.2.5 Materials

The materials selected for thermowells should be suitable for the temperature and corrosion environment encountered. Typically, AISI Type 316 Stainless Steel is used with carbon steel and low chromium alloy pipe.

High strength alloys (e.g. UNS N08811) should be consider in services that have mechanical issues at high temperatures.

Thermowells in corrosive services (e.g. dilute acids, chlorides, and heavy organic acids) require corrosion resistant alloys or coatings. Also electro-polishing a thermowell according to ASTM B912 increases its resistance to coke buildup and other product adhesion. To facilitate fabrication, flanged thermowells are generally used where coatings are needed. This also allows removal and inspection.

4.2.6 Construction

Thermowells may be screw mounted as shown in Figure 3, Panel B. However in process lines, flanged thermowells such as those shown in Panel A and C are more commonly used. Van Stone wells offer the advantage that the same thermowell can be used with different class flanges. However, longer non-standard studs are needed.

Wells threaded into a flange and back welded are acceptable provided they meet the requirements of ASME B31.3-2012, Paragraphs 328.5.3 and 335.3.2; i.e. the threads are completely covered and thread compounds are removed to the maximum extent possible. However, ASME B40.9 does not accept the back welding of thermowell threads into a reducing flange so this practice is not recommended for new construction. Ring joint flanges do not provide a stiff support to resist vibration so their use is not recommended.

At a minimum, flanged thermowells with full penetration welds should be provided. According to PTC19.3 TW, thermowells that are either threaded, have un-machined welds (i.e. in the as-welded condition) or use J-groove welds exhibit inferior mechanical strength when compared to a full penetration weld. A well machined from bar stock has the best strength.

The welds should be validated by non-destructive means such as a liquid dye-penetrant test. The transition at the root should be machined smooth to a radius of 3 mm to 6 mm ($^1/_8$ in. to $^1/_4$ in.).

Provided by : www.spic.ir

--`,,```,,,,````-`-`,,`,,`,`,,`---

Copyright American Petroleum Institute

Panel A - Flange Thermowell

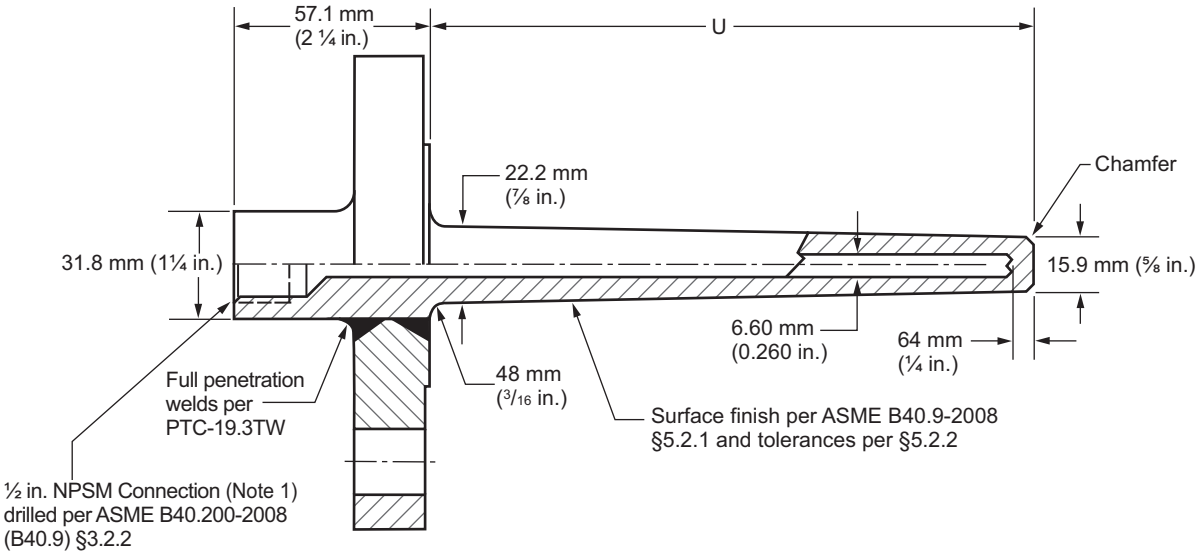

Panel B - Threaded Thermowell

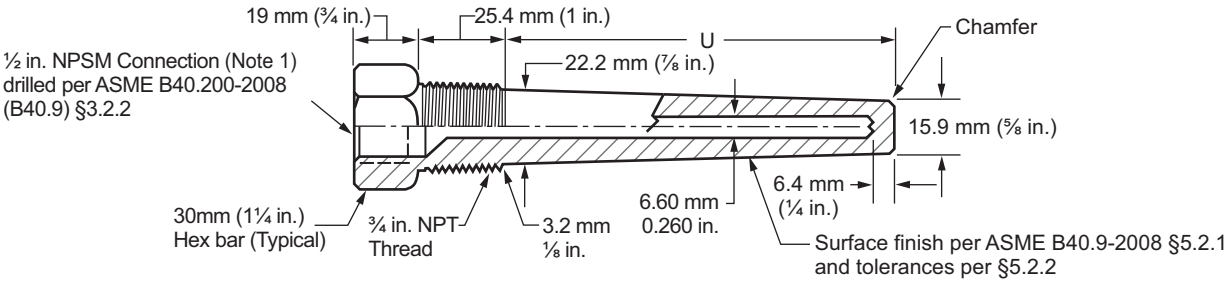

Panel C - Van Stone Thermowell

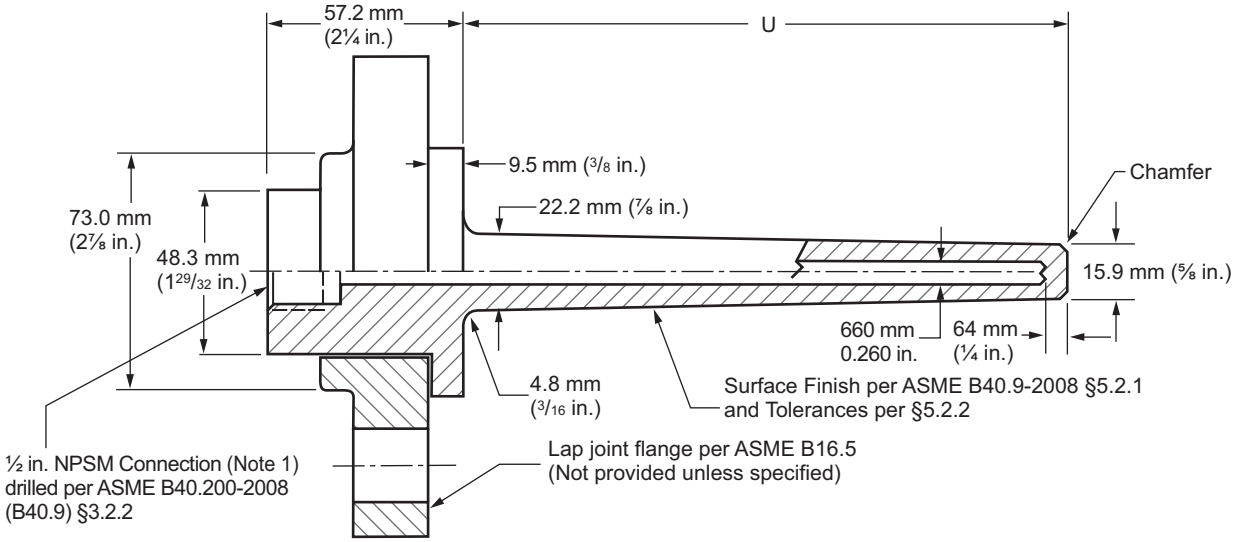

NOTE 1 Provide NPT threads if the ½ connection functions as a pressure boundary (does not apply when spring loaded attachment fittings= are used).

Figure 3—Standard Thermowells

Provided by : www.spic.ir

Copyright American Petroleum Institute

In extreme situations, for maximum strength the thermowell should be fabricated as a solid piece; e.g. provided by a forged fitting or machined Van Stone thermowell. For example, Figure 4 shows a Van Stone thermowell mounted in a studding outlet to obtain near maximum insertion into the pipe. Some additional vibration resistance is possible by increasing the root and tip diameter of the well. In some applications a tapered well yields a more rugged design. However, in many applications a straight well results in a stronger design so long as the root of the straight well is increased to match that of a tapered well. ASME PTC 19.3 TW can be consulted to determine which shank style is suitable for the process conditions.

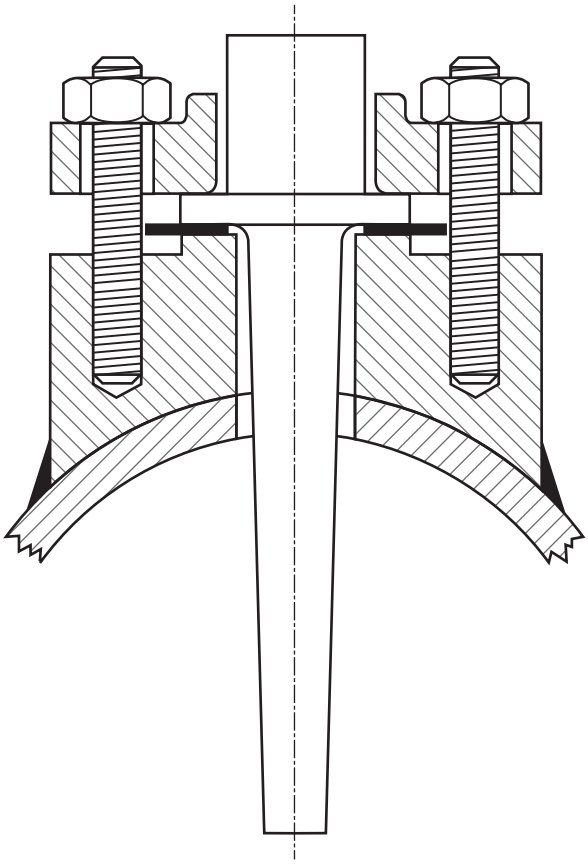

Figure 4—Van Stone Well in a Studding Outlet

4.2.7 Reactor Thermowells

When a multiple point reactor thermowell with spring loaded elements is used, a fabricated pipe thermowell is inserted into the reactor. Long reactor thermowells often need bracing along its length. It is recommended that the thermowell be supplied with the vessel to avoid alignment issues. As an alternative, sheathed thermocouple elements are routed in reactor catalyst beds though pressure tight bulk heads to the points of interest without using a thermowell.

Thermowells in alkylation, catalytic reforming, hydrocracking, and fluid catalytic cracking units require extra attention in their design. For reactors with a fluidized bed, protective sleeves are needed to protect the thermowell from abrasion.

Provided by : www.spic.ir

Copyright American Petroleum Institute

4.2.8 High Temperature Thermowells

Temperature installations in the radiant section of fired equipment should provide an accurate measurement and still be able to withstand the furnace environment. The temperature measurement should extend past the tube shadow and should avoid dead spots. The measurement points should not be in cold gas flow paths, nor should the flame impinge on them. Also, the penetration into the firebox should allow for interference from thermal expansion between the furnace walls and the tubes. Figure 5 shows a typical ceramic thermowell and installation.

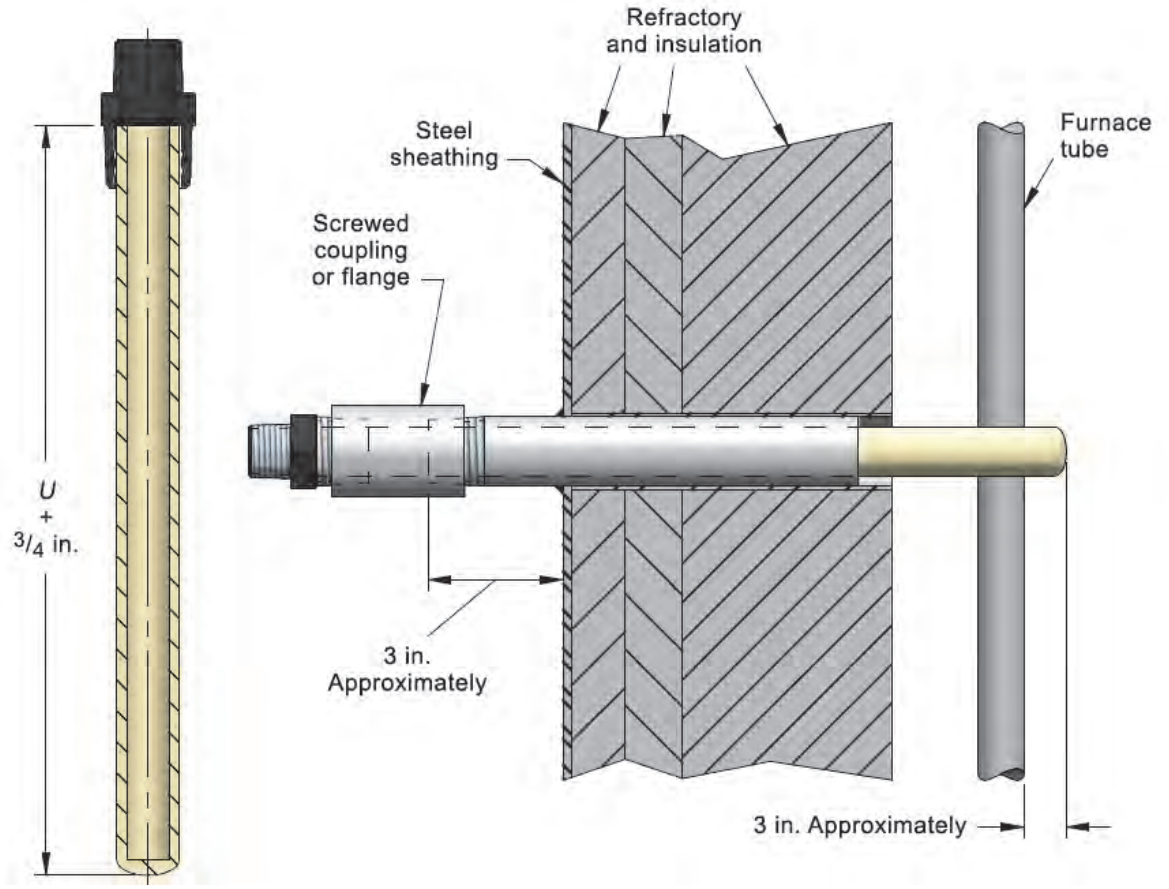

Figure 5—Ceramic Thermowell

Thermowell materials should be resistant to heat, oxidation, and the acid vapors in the firebox. N06600 AISI Type 446 and Type 347 Stainless Steel are used for heater thermowells. 12 mm (1/2 in.) or larger diameter bare thermocouples using nickel based sheaths are also used instead of thermowells. If they are installed horizontally supports should be considered to prevent sagging.

Ceramic thermowells perform better than metal wells with the higher temperatures that occur in refinery furnaces. For temperatures ≥540 °C (1000 °F) ceramics are recommended. Ceramic thermowells are mostly used in the radiant section of the furnace firebox and the lower hotter parts of the convection section. High purity, re-crystallized alumina is the preferred material. Ceramics are permeable and brittle. EN 50446-2006 has further information on the design and selection of ceramic thermowells. It is not recommend to spring load thermocouples inside ceramic thermowells. To prevent thermal shock damage the ceramic tube should be preheat to ≈480 °C (900 °F) prior to installing it in a hot environment.

Provided by : www.spic.ir

Copyright American Petroleum Institute

4.3 Thermocouples

4.3.1 General

In refining, thermocouples are the most widely used temperature measuring device. The thermocouple materials most commonly used are listed in Table 3. They are applicable to –270 °C to 1815 °C (–454 °F to 3300 °F) and have acceptable accuracy and repeatability.

Type E thermocouples have the highest EMF so are the most noise resistant. They are usable in most services including cryogenics. However, Type K is frequently used in furnaces due to its extended range. Type N thermocouples are also recommended for furnace use. Type J thermocouples are mostly considered to be legacy devices because the iron thermo-element is prone to rusting.

Table 3—Standard ISA/ASTM Thermocouples Types

ISA Type	Wire Pair Colors	Alloy Combinations		ASTM E230 Recommended Range Limits	
		Positive Lead (+)	Negative Lead (-)		
B	Grey/ Red	Platinum-30 % Rhodium	Platinum-6 % Rhodium	870 to 1700 °C	1600 to 3100 °F
E	Purple/ Red	Nickel-10 % Chromium (Chromel)	Copper-45 % Nickel (Constantan)	–200 to 870 °C	–328 to 1600 °F
J	White/ Red	Iron	Copper-45 % Nickel (Constantan)	0 to 760 °C	32 to 1400 °F
K	Yellow/ Red	Nickel-10 % Chromium (Chromel)	Nickel-5 % (Aluminum, Silicon)	–200 to 1260 °C	–328 to 2300 °F
N	Orange/ Red	Nickel-14 % Chromium, 1 1/2 % Silicon	Nickel-4 1/2 % Silicon-0.1 % Magnesium	0 to 1260 °C	32 to 2300 °F
R	Green/ Red	Platinum-13 % Rhodium	Platinum	0 to 1480 °C	32 to 2700 °F
S	Green/ Red	Platinum-10 % Rhodium	Platinum	0 to 1480 °C	32 to 2700 °F
T	Blue/ Red	Copper	Copper-45 % Nickel (Constantan)	–200 to 370 °C	–328 to 700 °F
C	Green/ Red	Tungsten-5 % Rhenium	Tungsten-26 % Rhenium	0 to 2315 °C	32 to 4200 °F

4.3.2 Fabrication

The most commonly used thermocouples assemblies are metal sheathed. Bare wire thermocouples are not recommended. Metal sheathed thermocouples provide an extended life and have long term accuracy. Metal sheathed thermocouples excel in applications that require long installation lengths; e.g. reactors. The sheathing provides both physical and chemical protection. They can be bent and welded onto a surface.

The thermocouple assemblies are made by densely packing the thermo-elements into the sheath with a high purity, insulating ceramic; e.g. magnesium oxide. Sheath diameters range from 1 mm to 20 mm (0.04 in. to 0.84 in.) with wire sizes from 8 to 36 AWG. Table 5 shows the recommended maximum temperature for thermocouple type by wire gauge. For ordinary temperature measurement 18 AWG wire is typically used and frequently a duplex (i.e. two elements) design is used to provide an online spare element.

ASTM E230-2012 thermocouples are provided in two accuracy grades Standard Tolerance and Special Tolerance as shown in Table 4. Also, matched thermocouple pairs are available for differential temperature measurement.

Two types of measuring junctions (see Figure 6) are in general use.

Provided by : www.spic.ir

--`,,,`````,`,`,```,,`,`````,-`-`,,`,,`,`,,`---

Copyright American Petroleum Institute

1) **Type A** has a grounded tip welded to the sheath for fast response and lower electrical noise.

2) **Type B** has an ungrounded tip and is electrically isolated from the sheath. It has a slower response.

The choice of grounded or ungrounded thermocouples is dictated by the application. For Type A thermocouples, a suitable ground path is necessary through the thermowell. Regardless, the signal ground should only be at one point.

Sheathed thermocouples should be provided according to the requirements of ASTM E608. IEC 61515 also covers fabrication and testing of thermocouples. Standard thermocouple tables are listed in ASTM E230.

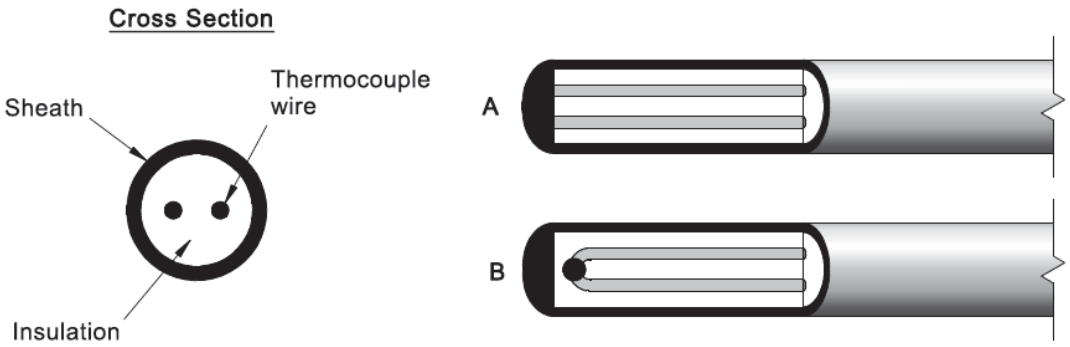

Figure 6—Metal-sheathed Thermocouple Types

Table 4—Thermocouple Interchangeability Tolerance

Type	Standard Tolerance	Special Tolerance
B	±0.5 %	±0.25 %
E	±1.7 °C (3.1 °F) or ±0.5 %	±1 °C (1.8 °F) or ±0.4 %
J	±2.2 °C (4 °F) or ±0.75 %	±1.1 °C (2 °F) or ±0.4 %
K	±2.2 °C (4 °F) or ±0.75 %	±1.1 °C (2 °F) or ±0.4 %
N	±2.2 °C (4 °F) or ±0.75 %	±1.1 °C (2 °F) or ±0.4 %
R	±1.5 °C (2.7 °F) or ±0.25 %	±0.6 °C (1.08 °F) or ±0.1 %
S	±1.5 °C (2.7 °F) or ±0.25 %	±0.6 °C (1.08 °F) or ±0.1 %
T	±1 °C (1.8 °F) or ±0.75 %	±0.5 °C (0.9 °F) or ±0.4 %
C	±4.4 °C (7.9 °F) or ±1.0 %	

Table 5—Recommended Limit for Single Element Sheathed Thermocouples

Sheath OD		Wire	Thermocouple Type °C (°F)				
in.	mm	AWG	T	J	E	K	N
1/25	1	32	260° (500°)	260° (500°)	300° (570°)	700° (1290°)	700° (1290°)
1/16	1.6	28	260° (500°)	440° (825°)	510° (950°)	920° (1690°)	920° (1690°)
1/8	3.2	22	315° (600°)	520° (970°)	650° (1200°)	1070° (1960°)	1070° (1960°)
3/16	4.8	19	370° (700°)	620° (1150°)	730° (1350°)	1150° (2100°)	1150° (2100°)
1/4	6.3	16	370° (700°)	720° (1330°)	820° (1510°)	1150° (2100°)	1150° (2100°)
3/8	9.5	13	370° (700°)	720° (1330°)	820° (1510°)	1150°(2100°)	1150° (2100°)

Provided by : www.spic.ir

Copyright American Petroleum Institute

4.3.3 High Temperature Thermocouple Measurements

The design of a high temperature thermocouple should be treated as a system where the sheath, the mineral oxide insulation, and the element material are mutually compatible. The sheath material should resist corrosion, spalling, and embrittlement. The element material of the thermocouple should be compatible with its environment.

The sheath and the mineral oxide insulation should be chemically compatible for the process conditions. For example, in furnaces, oxidation is a problem while, in a hydro-treating process, hydrogen diffuses through protective metal sheath and attacks the elements. If the sheath's chemistry and conductors are similar, the potential for diffusion of elements between them is reduced. This reduces the downward drift in the output that frequently occurs with high temperature measurements. Further, the sheath and element material have a similar coefficient of expansion which reduces cold working.

Some sheaths work better with gas fuels while others (e.g. UNS N06002) are superior at dealing with oil fuels.

The Chromel thermo-elements limit the application of Type E and K thermocouples. Chromel can develop a condition known as "green rot." This is caused by the preferential oxidation of the chromium in Chromel. The readings can shift downwards as much as 17 °C (30 °F) from the actual temperature prior to thermocouple failure. This attack is severe in low or marginal oxygen atmospheres, less severe with high oxygen levels but nonexistent at zero oxygen levels.

Since hydrogen attacks Chromel they should not be used with reducing atmospheres. At high temperatures it is possible for hydrogen to diffuse through the thermowell and sheath. This attack is severe at temperatures between 815 °C and 1040 °C (1500 °F and 1900 °F.)

Thermal aging of the Chromel thermo-element in both Type E and K thermocouples occurs primarily between 149 °C and 482 °C (300 °F and 900 °F). Thermal aging tends to increase the thermocouple EMF. The shift depends on the temperature history, previous cold working, impurities and the sheath material.

Many of the thermoelectric property changes are attributed to "atomic ordering." When a Type K thermocouple is used in the drifting temperature zone, some of the atoms of the positive thermo-element rearrange themselves from a random state into an ordered state. This atomic rearrangement changes the EMF output. This shift can result in a positive error of 1.7 °C to 2.8 °C (3 °F to 5 °F) for a Type K thermocouple. The Type E thermocouple has a smaller aging error. Stabilized thermocouple wire is recommended to address this problem.

Type E and Type K thermocouples also suffer severe attack from sulfurous atmospheres at high temperatures. Sulfur attacks both thermo-elements and causes rapid embrittlement and breakage of the negative wire through intergranular corrosion.

ASTM E230 Type N thermocouples have better performance in these situations. It has improved resistance to positive lead aging and less oxidation drift at temperatures ≥1095 °C (2000 °F) as well as withstanding sulfur attack better.

At higher temperatures heavier wire decreases aging and cold working but with increased response and conduction errors. Sheath material is generally available in stainless steel and nickel-chromium-iron alloys. Thermocouple degradation can be combated partly by using heavier gauge wire; e.g. eight gauge. Heavier wire is stronger so it resists cold working and it takes longer for impurities to affect the total molecular structure.

Thermal aging is also be controlled by using a nickel-chromium-iron alloy sheath; e.g. N06600, in place of a stainless steel sheath. The expansion for a N06600 sheath is more similar to the expansion of thermocouple wire than is stainless steel. This reduces thermocouple cold working. Plus, the potential for element diffusion is less which reduces drift.

Provided by : www.spic.ir

--`,,,`````,,`,,`,`,,,`,,`,`,,,,,`,,-`-`,,`,,`,`,,`---

Copyright American Petroleum Institute

4.3.4 Skin Tube Temperature Measurement

Welded Type K or N thermocouples are used to measure furnace skin tube temperatures. Furthermore, welded thermocouples are also attached to coke drums and reactor wall surfaces to manage temperature gradients during startup.

Tube skin thermocouples are used to warn against overheating from reduced fluid flow or coking inside the tubes. The tube skin thermocouples are located at the maximum temperature points. For coking prone feeds, tube skin measurements are typically made within two or three rows of the outlet. Multiple skin thermocouples along the potential coking areas are commonly provided.

Given their high failure rate, two or more tube skin thermocouples are recommended on critical tube sections. Measurement locations are determined by evaluating the tube temperature profile. Tube skin thermocouples are located on tube sections near their yield point or where the temperature profile is the highest. See API 556 for further recommendations concerning thermocouple locations.

Tube skin thermocouples provide diagnostic information. The full thermal history of a tube provides a better tube life estimate. The lost tube life can be determined from the temperature and duration of a thermal excursion.

A tube skin thermocouple should have a life span that exceeds the furnace turnaround time, which is in excess of two years. This is accomplished by using resistant materials, simplex eight gauge wire, protective radiation covers and installations that limit stress. The thermocouple sheath material should be suitable for the furnace environment, e.g. N06600. Some of the more common sheath materials used in furnaces include:

- AISI 310SS
- AISI 446SS
- N06002
- N12160
- N06600
- N06617

The thermocouple needs to be properly attached to the tube as shown in Figure 8. Care should be exercised to minimize the mass at the point of measurement. Additional mass slows the response and increases conduction errors. Tube skin thermocouples are often a 20 mm ($^3/_4$ in.) square by 3 mm ($^1/_8$ in.) thick pad curved to fit the contour of the tube and attached with a weld bead on three sides.

Another tube skin thermocouples design intended for fast response time is the knife edge element. The knife edge tube skin thermocouples (see Figure 9) can be provided with a 12 mm ($^1/_2$ in.) diameter heavy wall sheath. However, the multi-pass weld needed for this type of thermocouple causes additional stress that can reduce tube life. Modified versions of knife edge thermocouples (e.g. the fan type element) have also been developed which reportedly improved accuracy and service life.

To increase reliability, consideration should be given by having the thermocouples fabricated to selected parts of ASTM E235. Taking a radiographic thermocouple junction according to 6.3 to ensure its uniformity is recommended. A properly fabricated tube skin thermocouple can operate successfully for over six years.

Flexibility should be adequate to accommodate furnace tube expansion. Skin tube thermocouple sheaths can extend over 15 m (50 ft). Type S expansion loops (see Figure 8) should be provided along long tube sections to compensate for differential growth. Coiled sheaths should be provided just prior to the refractory to compensate for tube movement. The coils should be orientated in the direction of movement.

Gaps between the tube and the thermocouple sheath should be minimized. Gaps cause higher readings because the element is reading the firebox temperature. Also the sheath will deteriorate more rapidly when it is not cooled by the furnace tube. The contact area should be free of scale and oxide. Mounting clips should be welded along the cooler rear side of the tube to hold the thermocouple sheath. A typical design for attaching these thermocouples is shown in Figure 8.

Provided by : www.spic.ir

Copyright American Petroleum Institute

To prevent radiant heat from affecting the measurement, shields can be added which curve around the pipe and over the junction and are packed with a thermally opaque insulation (see Figure 7). The radiation shield should be welded to the tube as shown in Figure 7 along its area of contact.

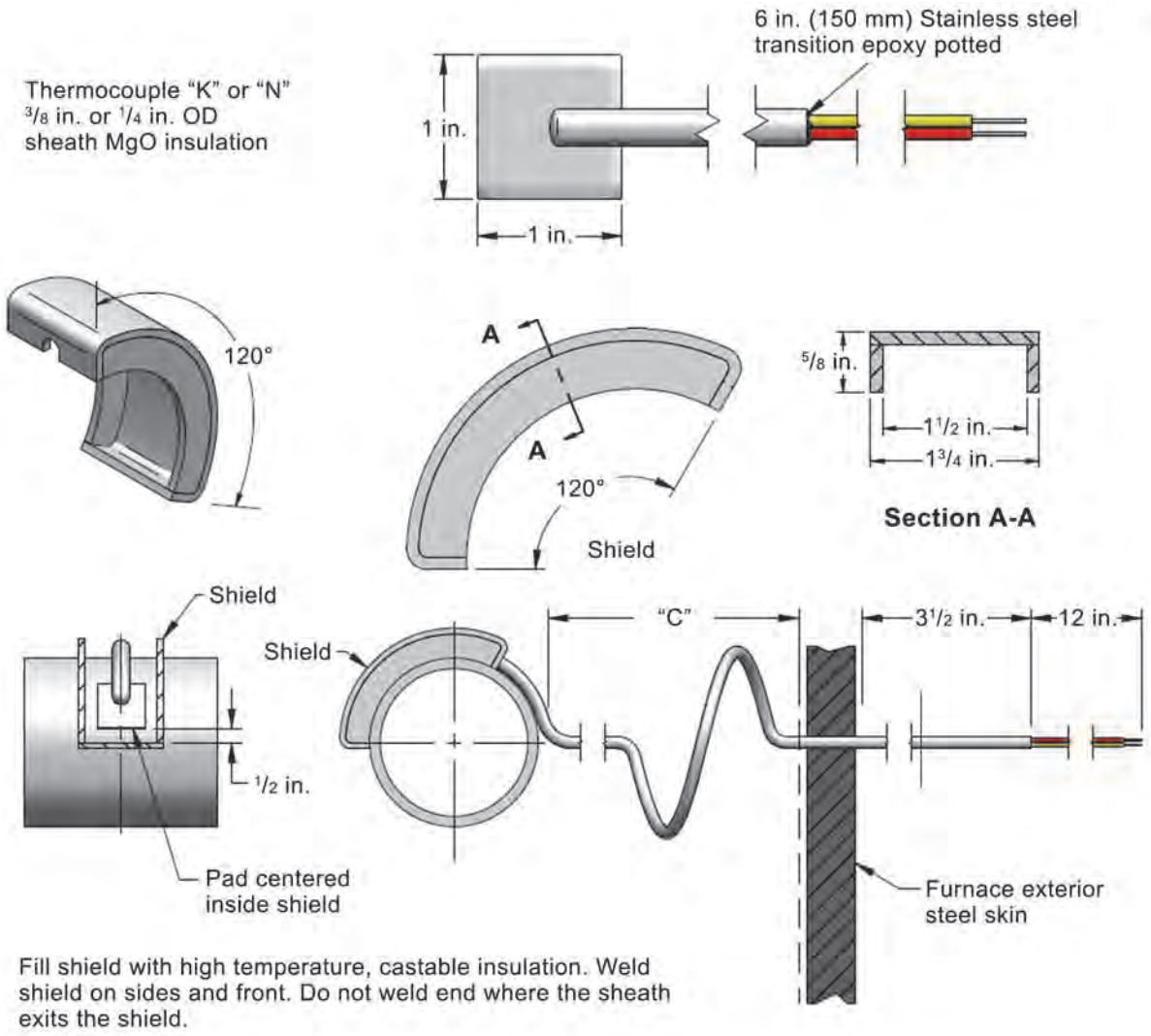

Figure 7—Type Skin Thermocouple with Radiation Shield

Outside the furnace, the tube skin sheath can be run through a thermocouple compression fitting. See Figure 10. The compression fitting is threaded into a coupling that is part of the furnace shell. The free end of the sheath is terminated in a thermocouple head. A second compression fitting is used to attach the sheath to the thermocouple head. The connection head should be provided with a support welded to the furnace shell; otherwise it would be only supported by the thermocouple sheath.

Alternatively, tube skin elements can be run into a nipple with an internal compression fitting. The compression fitting is threaded into a bulkhead that is welded inside the nipple. In turn the nipple is attached to a connection head with a pipe union fitting. Figure 8, Detail A-A shows this construction.

Provided by : www.spic.ir

Copyright American Petroleum Institute

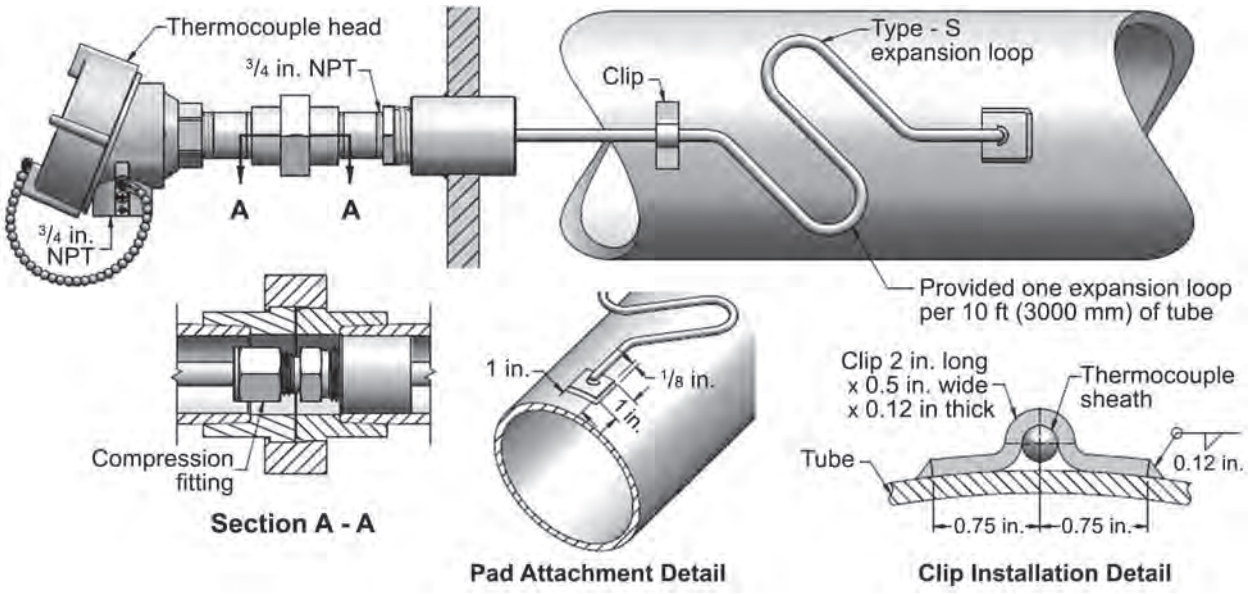

Figure 8—Fixed Thermocouple Head and Sheath with Type S Expansion Loop

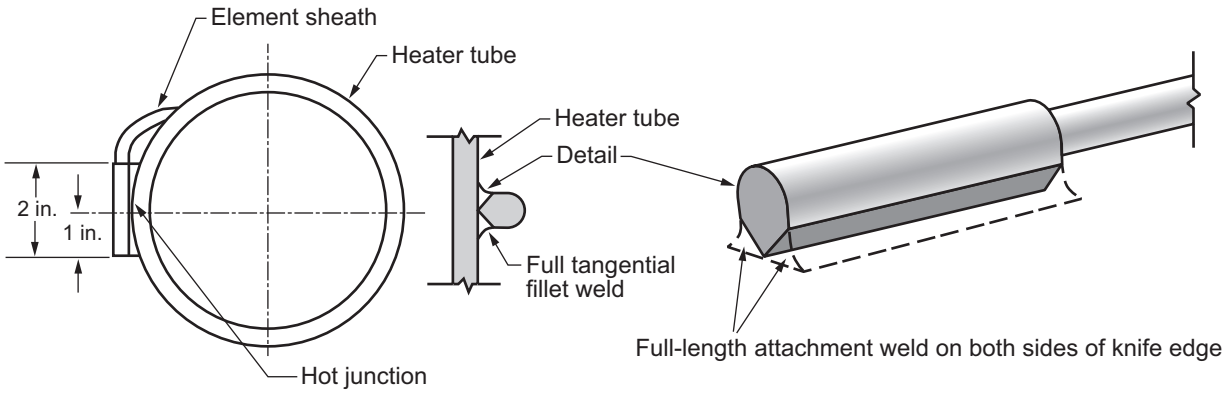

Figure 9—Knife Edge Tube Skin Thermocouple

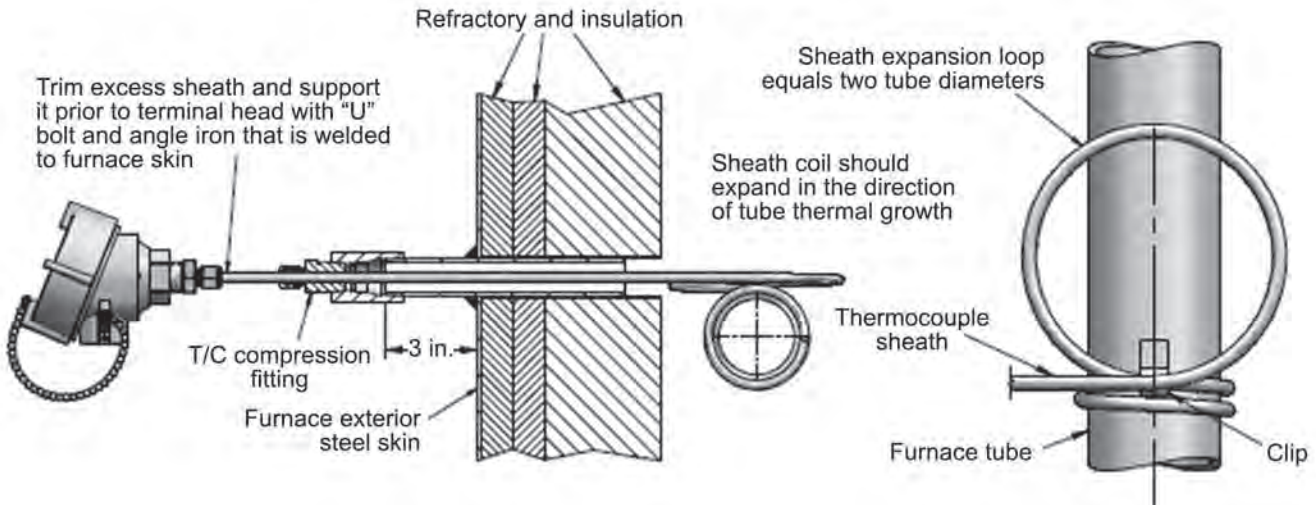

Figure 10—Furnace Tube Skin Thermocouple

Provided by : www.spic.ir

Copyright American Petroleum Institute

4.3.5 Thermocouple Extension Wire

Thermocouples should use the correct extension wire according to ASTM E230 standards. Thermocouple extension wires are available in pairs and multiple pair bundles. Single pair thermocouple extension wire is normally 16 AWG. Wire 20 AWG and smaller are normally used in multi-pair cables. Thermocouple wire is color code by type. In North American and much of South America the color codes are determined according to ASTM E230 with red always being the negative wire. IEC 60584-3 is used elsewhere when a national standard does not apply.

Each extension lead is made from the same materials as the thermo-elements. Materials for thermocouple extension wires are listed in Table 2. Ordinary wire causes errors by creating parasite voltages at each junction. Low accuracy extension wire makes the use of Special Tolerance thermocouples ineffective so a temperature transmitter is recommended at the thermocouple. For limits of error associated with extension wires, refer to ASTM E230.

It is best to minimize thermocouple junctions or terminations. When junctions cannot be avoided, terminal blocks made from the thermocouple material can be provided. Also standard terminal blocks that operate at a constant temperature minimize parasite voltages.

Extension wires should be separated and installed as described in API 552. For the best accuracy, terminations should be eliminated with the extension wire run straight to the converter. The easiest method converts the signal immediately at the thermocouple connection head (see Figure 14).

A significant economic advantage can be achieved by using a transmitter and ordinary wiring to the control system. Transducers in a EN 50446-2006 Form B package fit inside a standard thermocouple head so no additional accommodations are needed. See 8.9 for further information about temperature transmitters.

4.4 Resistance Temperature Devices

4.4.1 General

Resistance temperature measurements provide a more accurate measurement than thermocouples. Resistance elements are used in installations where improved accuracy is needed; e.g. differential temperature measurement.

RTDs (Resistance Temperature Devices) use the principle that a material's electrical resistance changes with temperature. Three types of wire are generally used for resistance elements. Nickel is used for temperatures up to 315 °C (600 °F) and platinum, the most accepted and accurate, is used for temperatures up to 650 °C (1200 °F). A third type, copper, is used in large motors for temperatures up to 150 °C (300 °F).

Table 6 lists some of the other materials used for temperature measurement.

Table 6—Standard Resistant Temperature Elements

Type	Remarks
Platinum	IEC 60751/ASTM E1137 Standard Curve
Nickel	DIN 43760 Standard Curve
Copper	Edison Winding No 15
Balco Nickel-Iron Alloy	Ni-Fe ASTM B267-2007 Class 8

4.4.2 Calibration

Platinum temperature measurements can be used from –200 °C to 650 °C (–330 °F to 1200 °F) but the practical range is from –200 °C to 450 °C (–330 °F to 840 °F).

Provided by : www.spic.ir

Copyright American Petroleum Institute

The most common curve used in petrochemical services is the IEC (DIN) curve, with α = 0.00385 Ω / Ω /°C. The United States traditional “Industrial Standard” Platinum curve has an α = 0.003902 and is still provided with some motors and other non API equipment. Prior to 1980, the SAMA curve, α = 0.00392, was often provided. These curves are based on a sensing element resistance of 100 Ω at 0 °C. Table 7 lists some of the RTD standards and their alphas. The use of polynomial equations with between two and four terms, depending on the element, is needed.

Table 7—Alternate Resistant Temperature Elements

Material	α	Base Ω	Base T	Remarks
Platinum	0.003902	100	0 °C	USA “Industrial Standard”
Platinum	0.003920	100	0 °C	MIL-T-24388
Platinum	0.003923	100	0 °C	Legacy SAMA Standard
Platinum	0.003916	100	0 °C	JIS C1604
Platinum	0.003911	100	0 °C	GOST
Copper	0.004274	10	25 °C	Edison Winding No 15
Nickel	0.00618	100	0 °C	DIN 43760
Nickel	0.00672	120	0 °C	USA Legacy Standard
Ni-Fe Alloy	0.00518	1000	20 °C	NiFe more linear than Ni
Tungsten	0.00456		20 °C	High Temperature ≥1000 °C

IEC 60751/ASTM E1137 Platinum RTDs are available in two accuracy types: Class A ±0.15 °C @ 0 °C and Class B ±0.30 °C @ 0 °C. By using Callendar-Van Dusen constants, more accurate RTDs can be fabricated if required. See Figure 11 for an illustration of the two accuracy classes. IEC 60751 has a Class AA curve as well with ±0.10 °C @ 0 °C.

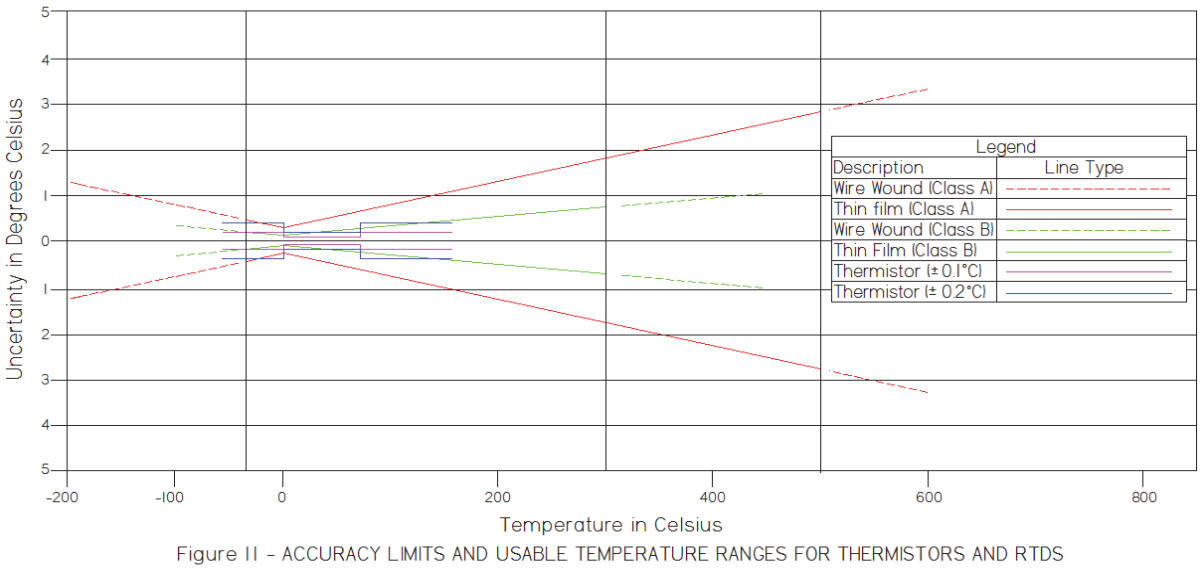

Figure 11 - ACCURACY LIMITS AND USABLE TEMPERATURE RANGES FOR THERMISTORS AND RTDS

Figure 11—Accuracy Limits and Usable Temperature Ranges for Tthermistors and RTDs

Provided by : www.spic.ir

Copyright American Petroleum Institute

4.4.3 Fabrication

Platinum RTD elements are either wire-wound or thin film. The wire-wound type is the normal choice for refinery processes due to its durability and broader range and has a 25 mm (1 in.) sensitive length. Wire-wound RTDs also have superior interchangeability and stability at high temperatures. Thin film RTDs are more durable in high vibration applications with same the accuracy but have a reduced temperature range. They are preferred for high velocity gas applications.

Wire-wound elements are made by winding a wire strand onto a mandrel until it equals 100 ohms at 0 °C (32 °F). The sensing wire is then covered with a nonconductive protective coating.

Another type of wire-wound element is made winding a fine strand of platinum wire into a coil. The coil is then inserted into a mandrel and ceramic is packed around the sensor to prevent it from shorting. The ceramic powder cushions the coils. This construction is strain-free as well as vibration and shock resistance. RTDs fabricated to meet ASTM E1137 withstand 3 G of vibration and 50 G of shock for 11 milliseconds.

The manner in which the wires inside the probe are insulated is a limitation that can prevent using an off-the-shelf RTD at high temperatures (above 200 °C/392 °F). Some RTD designs use plastic or fiberglass insulated wire that is directly attached to the element. This limits the element's maximum working temperature.

According to ASTM E1137, to achieve their entire range a RTD should use nickel plated copper, nickel, platinum, constantan, or manganin alloy wire encased in MgO. These materials should be used along the entire sheath length to the transition piece. Copper wires are then attached. The connections should be welded.

Hermetic sealing of the transition piece is recommended. The potting at transition piece provides a moisture barrier around the external lead wire. For temperatures greater than 200 °C (390 °F) moisture resistant ceramic or similar adhesive should be used.

4.4.4 Application

The most commonly used RTD is the tip sensitive, three-wire type with two measurement wires and one wire compensation wire. The compensation wire corrects for the resistance of the extension wire. Two wire and four wire versions are also available. The two-wire type is used mostly where space is limited, such as motor windings and in bearing housings. When this type of element is used to provide compensation, the third conductor extension wire is terminated with one of the measurement wires at the point nearest the measurement element. Conversely, four-wire RTDs are available with the fourth wire used for additional compensation. They are used when more accuracy is desired.

Another type of platinum RTD is the averaging type. It is available in lengths near twenty meters (seventy feet) and it useful for measuring the average air temperature into winterized air coolers or heater air ducts.

It is recommended that tip sensitive Platinum RTDs be fabricated according to ASTM E1137 and specified with a –200 °C to 650 °C (–330 °F to 1200 °F) range as a Class A device. This ensures that the element has the necessary capabilities.

The precautions and practices applicable to thermocouples are also applicable to RTDs, with the following exceptions.

a) Nickel alloy sheathes should be provided for temperatures ≥260 °C (500 °F).

b) To compensate for lead wire resistance, two wires are connected at one end of the RTD. The most common wiring is with a triad cable.

Provided by : www.spic.ir

Copyright American Petroleum Institute

c) RTDs experience a self-heating problem when using simple resistance transducers. Low current devices are recommended.

At high temperatures hydrogen or metal vapors can gradually and permanently shift the Platinum RTD calibration. Hydrogen permeates through the thermowell and sheath from the process while the metallic vapor comes from the sheath and lead wires.

4.4.5 RTD Extension Wires and Signal Transmission

Ordinary copper wire is used to connect the instrument to the RTD sensor. Lead wire insulation should be color coded according to IEC 60751. Using a locally mounted transmitter is preferred. This allows the use of standard signals and provides flexibility in terminating the sensor connections. Transmitters also filter the sensor signal of unwanted electromagnetic interference (EMI).

For systems with multiple RTDs (e.g. machinery monitoring), the wires can be run to a field terminal strip. A multi-conductor 20 or 24 AWG cable containing triads is then used to bring the signals to the monitoring system. However, exceptionally long runs could need a larger gauge wire.

4.5 Thermistors

4.5.1 Selection and Application

Of the three commonly used temperature sensors, thermistors are the most sensitive. They have an interchangeability tolerance of ±0.1 °C or ±0.2 °C (±0.18 °F or ±0.36 °F) out to 70 °C (158 °F) depending on the thermistor and span. However thermistors are limited in their temperature range with a nominal range of 0 °C to 260 °C (32 °F to 500 °F). See Figure 11 for an illustration of the two interchangeability tolerances when compared to platinum RTDs.

A thermistor is a composed of sintered metal oxide semiconductor material that exhibits a sizeable resistance change with temperature. Because of their compact size, thermistor elements are commonly used when space is limited. In the refining and petrochemical industry they are usually found in existing equipment; such as motors, power supplies and HVAC systems.

Thermistors usually have negative temperature coefficients (NTC), so the resistance decreases as the temperature increases. However, PTC thermistors have a positive curve and are use in special applications such as current limiting fuses.

Unprotected metal oxide is prone to moisture damage, so they are encapsulated in glass or epoxy. If moisture penetrates the encapsulation, the DC bias voltage causes silver migration that eventually results in electrode shorting.

Finished thermistors are chemically stable so they are not significantly affected by aging. Glass encapsulated thermistors are more stable than RTDs according to the National Institute of Standards and Technology (NIST). Since thermistors are small they respond quickly to temperature changes but this also makes them susceptible to self-heating errors.

Mechanically the thermistor is a simple and reliable sensor. The most common thermistor is a two wire bead. The bead diameter ranges from 0.5 mm (0.02 in.) to 5 mm (0.2 in.). The beads are more fragile than RTDs or thermocouples but thermistors are available in stainless steel sheaths.

Thermistors are usually designated according to their resistance at 25 °C (77 °F). The most common is the 2252 ohms thermistor. Many devices accept the 2252 ohm, Curve B thermistor. Other common sizes are 5000 and 10,000 ohms.

Provided by : www.spic.ir

Copyright American Petroleum Institute

The high resistance of a thermistor gives it an advantage. A three or four wire connection is not needed as with RTDs. For example, a 5000 ohms thermistor with a temperature curve of 4 % per °C and a lead resistance of 100 ohms only has a 0.05 °C (0.09 °F) error.

However, because they are semiconductors thermistors are more susceptible to permanent calibration loss at high temperatures. Extended exposure above their operating limits causes them to drift.

4.5.2 Linearization

The resistance-temperature relationship of a standard thermistor is negative and nonlinear. The thermistor's resistance to temperature relationship given by the Steinhart & Hart equation:

$$T = (a + b(\ln R) + c(\ln R)^3)^{-1}$$

Where a, b, and c are constants, R is the thermistors resistance in ohms and T is the absolute temperature in Kelvin's. The constants are normally determined uniquely for each application by solving three simulations equations with values selected from a table for the selected element.

While the Steinhart & Hart equation is a close fit, it does not always provide the precision needed across the full range of –80 °C to 260 °C (–112 °F to 500 °F). This can be corrected by fitting the Steinhart & Hart equation over 50 °C (122 °F) or 100 °C (212 °F) increments and then splicing these fits to cover the needed range.

Below are guidelines that show the interpolation error for each temperature span:

a) ≤ 0.003 °C error for 50 °C temperature spans within 0 °C ≤ t ≤ 260 °C
(≤ 0.005 °F error for 90 °F temperature spans within 32 °F ≤ t ≤ 500 °F)

b) ≤ 0.02 °C error for 50 °C temperature spans within –80 °C ≤ t ≤ 0 °C
(≤ 0.04 °F error for 90 °F temperature spans within –112 °F ≤ t ≤ 32 °F)

c) ≤ 0.01 °C error for 100 °C temperature spans within 0 °C ≤ t ≤ 260 °C
(≤ 0.02 °F error for 180 °F temperature spans within 32 °F ≤ t ≤ 470 °F)

d) ≤ 0.03 °C error for 100 °C temperature spans within –80 °C ≤ t ≤ 25 °C
(≤ 0.05 °F error for 180 °F temperature spans within –112 °F ≤ t ≤ 77 °F)

Alternatively, it is possible to determine the three constants by a bench calibration at three different temperatures and solving three simultaneous equations based on the Steinhart & Hart equation.

For use with a standard resistance meter, linearization is possible by connecting a resistor in parallel with the thermistor. The value should equal the thermistor's resistance at the mid-range temperature. The result is a significant reduction in non-linearity. However, this is only recommended when resolution less than 0.1 % is acceptable.

4.6 Distributed Temperature Sensing

Fiber optic distributed temperature sensing systems (DTS) are used to monitor surface temperatures of vessels or pipe. Temperatures are measured along the fiber optical cable continuous profile. Measurements are achieved over extended distances making it useful for pipeline monitoring. Resolution within 1 m (3 ft) with accuracy to within ±1 °C (1.8 °F) is possible. With spiral wrapping and other techniques tighter spatial resolution is possible.

Provided by : www.spic.ir

Copyright American Petroleum Institute

4.7 Radiation Pyrometers

Non-contact pyrometers or radiation thermometers operate between –30 °C and 3900 °C (–22 °F and 7050 °F) and they have a rapid response. In refineries they are used mostly in high temperature services; e.g. fired heaters, sulfur reactors. There are a number of different technologies used:

a) Broad Band Infrared;

b) Narrow Band Infrared;

c) Two Color Ratio;

d) Infrared Thermocouple;

Pyrometers come in various forms and have different power requirements. Some devices operate on a two wire 4-20 mA circuit. Infrared thermocouples are self-powered, using infrared radiation to produce a standard thermocouple signal. They cover temperatures from –45.6 °C to 260 °C (–50 °F to 500 °F) over the 6.5 to 14 micron spectral range.

To measure the true temperature, the effective emissivity has to be determined. This is accomplished using the radiation laws or by calibrating the pyrometer with the material at a known temperature.

Materials property changes affect the emissivity. For instance as materials oxidize, emissivity tends to increase. Errors also occur if the target reflects radiation from other hotter surfaces, including sunlight. Also errors can be introduced if the path is obstructed by absorbing materials; e.g. fumes, smoke, or glass.

Emissivity uncertainties are reduced using short wavelengths or by ratio radiation techniques. Short wavelengths, around 0.7 microns, are effective. There is a high signal gain at these wavelengths. Also, selecting a device with the appropriate narrow band helps compensate for reflection and absorption problems. Controlling the field of view assists in obtaining a reliable measurement. If the target size is smaller than the object being measured the reading is more precise. Also, taking the measurement perpendicular to the target eliminates reflection issues.

It is important to keep the sight path clear and to keep the optical elements clean. Purge assemblies are recommended for cooling and for keeping the lens clear. A typical installation is shown in Figure 12. Also the use of high quality fiber optic cable between the sensor and the viewing port has proven effective in protecting the sensor for overheating. Fiber cables operate at 200 °C (390 °F), which mostly eliminates the need for external cooling.

The user needs to investigate the application, select the optimum technology, determine the compensation methods and design the installation with a supplier who is knowledgeable about the application. See ASTM E2758 for further information on pyrometer application.

4.8 Temperature Element Wiring

Except for thermistors, wire junctions and terminations should be minimized since the low impedance sensor wires are susceptible to electromagnetic interference (EMI). Temperature element wire extensions should terminate in either a connection head or a transmitter.

Transmitters amplify the low impedance sensor signal to a more robust high-level signal to improve the integrity of the temperature measurement to the control system. It is recommended the transmitter be mounted close to the sensor to minimize the pickup of EMI noise.

Armored cable attached to the temperature element sheath is recommended to separate the thermowell from the conduit. See Figure 13. When a connection head is mounted on a thermowell, the conduit should be vented to allow the process fluid to escape upon thermowell failure. Also a seal should be provided between the vent and the junction box.

Provided by : www.spic.ir

Copyright American Petroleum Institute

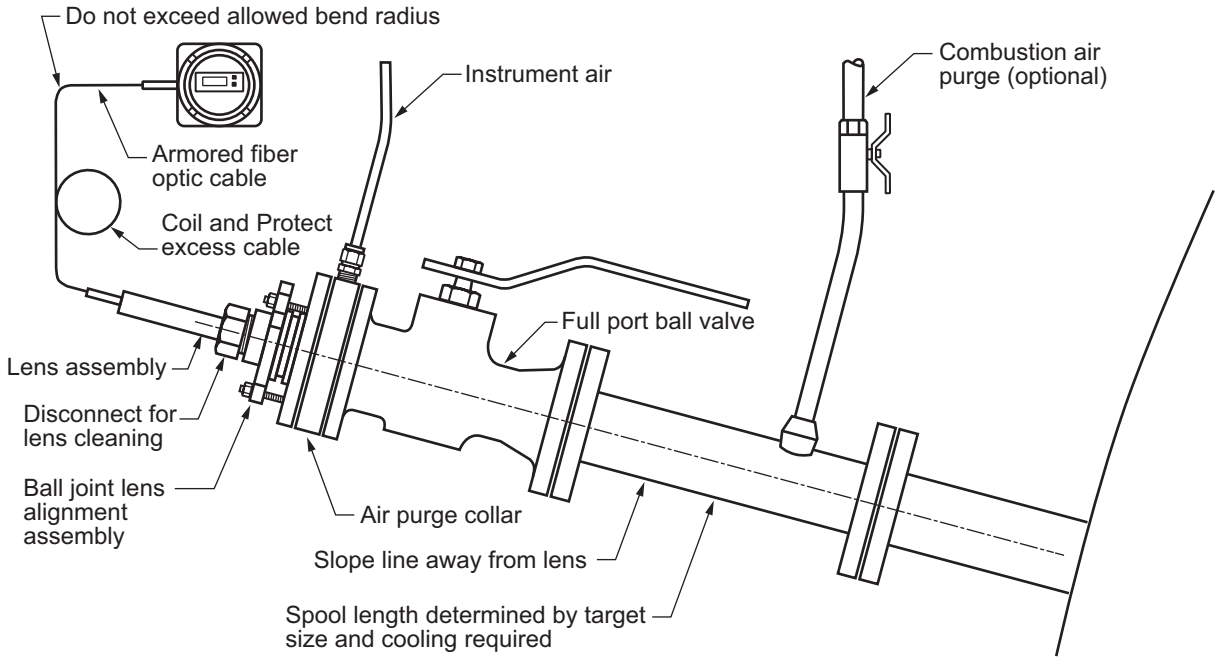

Figure 12—Example Pyrometer Installation for Claus Reactor

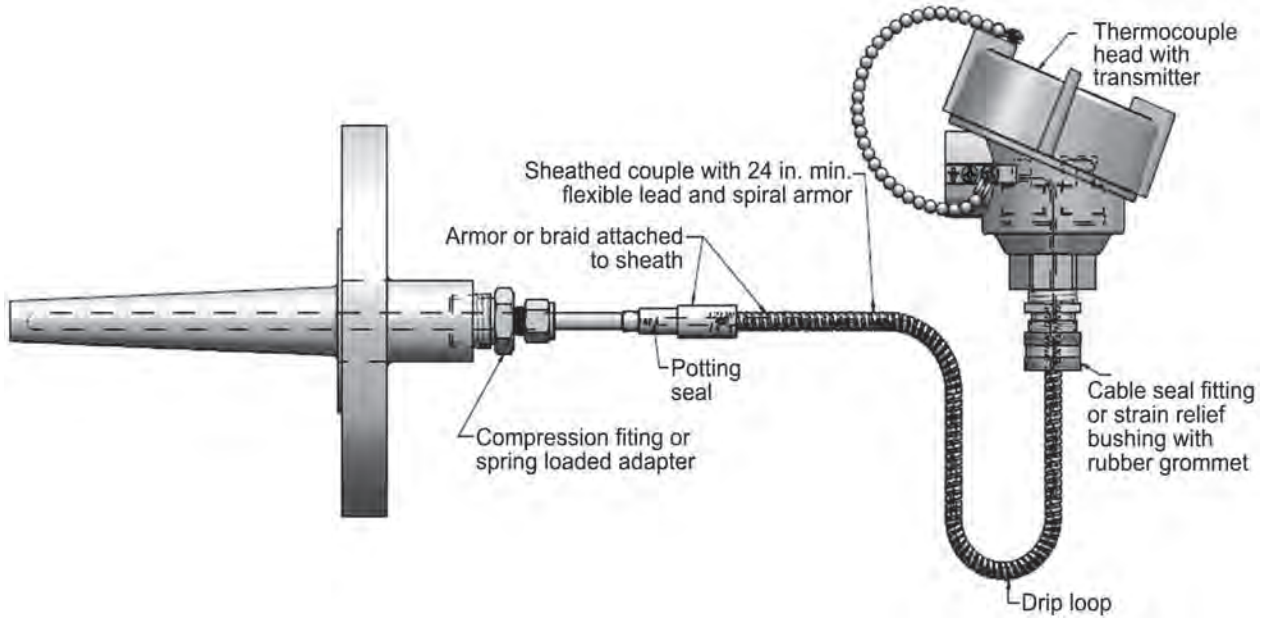

Figure 13—Sheathed-type Thermocouple with Armored Lead

4.9 Temperature Signal Conditioners and Transmitters

A temperature signal conditioner or transmitter receives a sensor's low impedance signal, amplifies it and generates a standard output signal. These devices have a high input impedance to ensure that input signals are maintained at appropriate values. They also have high common mode rejection to control electromagnetic noise.

Provided by : www.spic.ir

Copyright American Petroleum Institute

They also provide the cold-junction compensation for thermocouples and compensate for ambient temperature variations. They are configurable for various sensors like RTDs, thermocouple, etc. A linear output is generated according to industry-standard tables, such as produced by ASTM and NIST. Signal conditioners are available that are configurable to accept a custom linearization.

They are also available with redundant circuits and dual-sensor inputs. A duplex temperature element can be used with these dual-sensor input transmitters to help detect non-systematic sensor drift as well as increase reliability. Also, most transmitters provide detailed information about the condition of the sensor, transmitter, and process being monitored. Multi-input temperature fieldbus transmitter is another option for managing temperature measurements.

There are different ways to mount local temperature transmitters.

a) Mount the transmitter on the thermowell or in the connection head. See Figure 14. For instance, EN 50446 Form B transducer enclosures are designed to fit inside a small DIN connection head.

b) Remotely mount the transmitter, so an integral meter can be used as an indicator.

c) Using CENELEC/DIN Style enclosures mounted on a standard IEC 60715 Top Hat rail in a junction box can be effective for a reactor or compressor with multiple temperature elements.

Thermocouple burnout protection (i.e. open circuit or loss of signal detection) is usually provided. Some devices inject current into the thermocouple to check them. This type of checking could affect other devices that are wired in parallel with the thermocouple.



Figure 14—Transmitter Mounted in Connection Head

4.10 Local Temperature Indicators

4.10.1 Bimetal Dial Thermometers

Bimetal thermometers are the most common thermometers in refining. They have circular dials and are available in a range of temperatures. However, the higher range gauges have suppressed zeros and do not read ambient temperatures.

Thermometers should have an ASME B40.3 Grade A accuracy; i.e. a minimum accuracy of ±1.0 % of span. It is recommended that bimetal thermometers have the following features:

a) a measuring element contained in a dampening fluid;

Provided by : www.spic.ir

Copyright American Petroleum Institute

b) five inch ASME nominal diameter dial;

c) non-glare white finish with black or contrasting color markings on the dial face;

d) stainless steel, weatherproof case with bezel ring;

e) 6 mm ($^1/_4$ in.) OD protection tube;

f) $^1/_2$ in. external threads;

g) hexagonal head or wrench flats;

h) ASME B40.3-2008 standard length;

i) either an every-angle or back-connected dial.

The most common type is the adjustable every-angle construction. For below grade sumps stem lengths up to 3 m (120 in.) are available. The minimum length is 64 mm ($2^1/_2$ in.), which is determined by the length of the measurement coil. Consequently, at least 50 mm (2 in.) or more of the thermowell should protrude into the pipe.

Care should be taken to ensure readability from a convenient location. For applications at temperatures below –30 °C (–22 °F), it could be desirable to use a filled system. See ASME B40.3 for further details on bimetal thermometers.

See 3.9.1 for recommendations concerning temperature gauge application.

4.10.2 Filled System Temperature Instruments

A filled thermal system contains a temperature sensitive fluid and is composed of a bulb, a coiled expansion capsule, and a capillary tube. Filled temperature systems outperform bimetal elements. Their accuracy is 0.5 % of span and they are rugged, autonomous devices. They are self-powered, so they are free of electrical safety issues.

Besides, indicators filled systems are used with remote recorders and controllers. (In new applications, wireless transmitters are often more effective.) They are useful for mounting the instrument at a convenient location for visibility and access. Depending on the bulb size and fill, they can operate instruments at a distance of 46 m (150 ft).

Compensation elements can be used to adjust for the ambient temperature effects, either in the case, or in the case and along the capillary. These are useful for longer distances or for making measurements that are close to the ambient temperature.

There are four fill types or classes according to ASME B40.4 used in thermal systems. See Table 8. Each class has specific requirements that should be considered. They can be misapplied if the user is not familiar with these requirements. For instance they can be sensitive to the elevation of the bulb relative to the instrument. There are subclass intended to deal with the type ambient temperature compensation or construction options intend address elevation issues. See ASME B40.4 for further information concerning the application of subclasses. Mercury, which was a recognized class, should be avoided.

For indication, a Class IV fill, which is a molecular sieve design that uses inert gas and activated carbon, often has the best combination of features. It's not position sensitive and a typical bulb dimension is 76 mm × 9.5 mm (3 in. × $^3/_8$ in.), which enables its thermowell to fit in the same envelope as a thermowell for 6 mm ($^1/_4$ in.) temperature element. The maximum capillary length is 15 m (50 ft) and has ranges that start at –195 °C (–320 °F) and end at 650 °C (1200 °F). However, since they are gas operated they do not to generate enough torque to operate controllers and recorders.

Filled temperature systems have to contend with the following disadvantages:

— various bulb sizes prevent using standard thermowell dimensions;

Provided by : www.spic.ir

Copyright American Petroleum Institute

Table 8—Thermal Fill Types

Fill Class		Typical Range Limits, °C (°F)	Scale
I	Liquid	–70/400 (–100/750)	Linear
II	Vapor	–40/260 (–40/500)	Nonlinear
III	Gas	–200/700 (–320/1300)	Linear
IV	Absorbed Gas	–200/700 (–320/1300)	Linear

— slow response (approximately 20 seconds in a thermowell);

— narrow spans are not available;

— not suitable for high temperatures;

— zero and span adjustments interact so they are difficult to calibrate;

— elements are not repairable.

The bulb diameters and lengths vary significantly from standard thermowell bores. For instance some bulbs require 1 in. threaded connections and the sensitive length can be 150 mm (6 in.) long. To ensure a correct installation it is recommended that the thermowell be purchased with the instrument.

Like a diaphragm seal, the capillary tubing should be protected from mechanical damage. The capillary should be armored and supported. See ASME B40.4 for further discussion on the various fill types.

4.10.3 Local Electronic Thermometers

Battery power electronic thermocouple indicators are available. They have better accuracy and range than either bimetal or filled system indicators. They are useful for local furnace decoking where higher temperatures greater than 650 °C (1200 °F) are encountered.

5 Pressure

5.1 Introduction

Pressure transmitters and differential pressure transmitters are the most ubiquitous measurement devices in a plant. They can be used to measure pressure, level, and flow.

Differential pressure transmitters in particular are almost a universal measuring device. They can measure pressure loss across filters, etc. They are also used for flow measurement with head meters. They measure the level head in pressurized vessels and non-pressurized tanks. They are also used for measuring density and level interfaces. By leaving the low pressure connection open to the atmosphere, differential transmitters can be used to measure low gauge pressure as well.

Provided by : www.spic.ir

Copyright American Petroleum Institute

For further information concerning pressure measurement see ASME PTC 19.2-2010. This document provides in depth guidance on the various pressure measurement devices, their installation and accessories, as well methods for uncertainty analysis.

5.2 Pressure Measurements

Gauge pressure is the most common pressure measurement. The zero reading is the ambient pressure and other than the capabilities of the instrument there is no maximum value.

Compound pressure instruments measure above and below atmospheric pressure and has an elevated zero. The instruments are used for furnace draft, condensers, compressor suctions, bi-directional flow meters, and applications where vacuum occasionally occurs. Standard differential transmitters that are linearized across both the positive and negative portions of the range limit are used for these services (see 7.3.2.2 about the occurrence of non-zero crossing differential pressure transmitters).

Absolute pressure and vacuum are different measurements. Vacuum indication is a below atmospheric pressure measurement. Bottom of scale is zero; i.e. atmospheric pressure. The top of display scale is a negative pressure representing the maximum vacuum. This is often expressed in inches of water or mbar but with larger ranges, other units are used; such as mm Hg. The maximum range for a vacuum transmitter is –101 kPa (–14.7 psig.) This measurement is made with a standard pressure transmitter with a reverse acting output or a differential pressure with the process connection made to the low pressure tap.

On the other hand, zero kPa[a] or PSIA is the bottom of scale for absolute pressure measures. See Figure 15. As a result, a transmitter designed for absolute pressure is needed. Its reference point is a constant pressure capsule rather than atmospheric pressure. Bottom of scale is zero absolute pressure.

A potential difference of up ±1.75 kPa (±0.25 psig), which is a normal barometric variation, could occur when one is substituted for the other. Material balance calculations are based upon absolute pressure. Absolute pressure is also used for gas flow calculations. The error from using a gauge pressure with higher ranges is reduced and is usually adequate for most purposes. However, ISO TR 9464-2008 recommends when variations in atmospheric pressure result in a 0.1 % change in mass flow, it is recommended that gauge pressure instruments be replaced with absolute pressure instruments. If desired an online master barometric measurement can be made to correct for these variations.

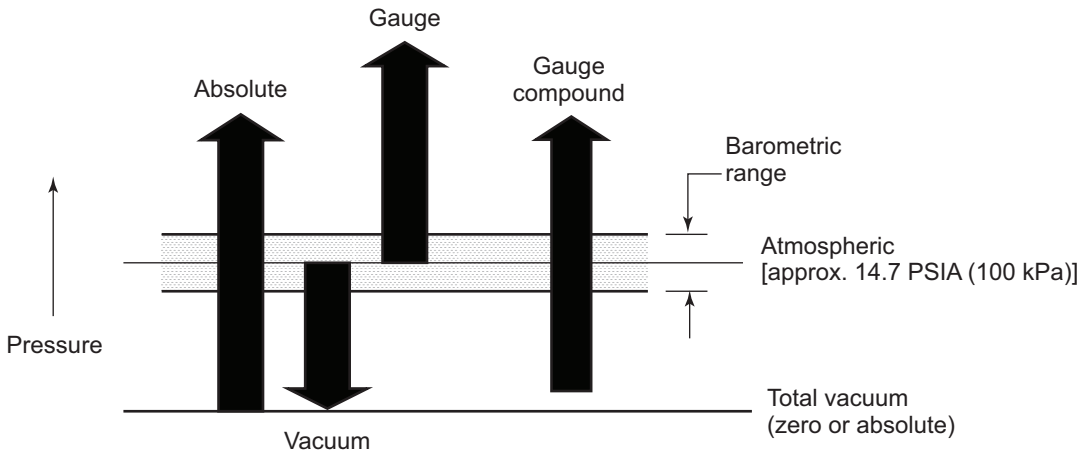

Figure 15—Definition of Pressure

Provided by : www.spic.ir

Copyright American Petroleum Institute

5.3 Pressure and Differential Pressure Transmitters

Pressure and differential pressure transmitters consist of a flexible sensing element that responds to pressure changes. A transducer uses the element displacement to produce an electronic output. Bourdon tubes, diaphragms, and bellows elements are used but the most common elements are diaphragms.

Diaphragms with volume displacements of less than 1.6 cc (0.10 $in.^3$) are used for most measurements. Various diaphragm materials are available for corrosive services. To provide over range protection and dampening, the transmitter measurement capsule is filled with an inert liquid.

The difference with pressure and differential pressure transmitters is in their construction and range. Differential pressure transmitters have two process connections and typically measure lower pressures. Pressure transmitters have one process connection and a small internal passage for the atmospheric reference. Differential pressure transmitters can be used as regular pressure transmitters by keeping one port open to reference atmosphere. Port protector fittings are recommended when using a differential transmitter in this manner.

Except for draft transmitters, pressure and differential transmitters have a minimum allowed body pressure rating ≥10.3 MPa (1500 psig) with a high and low over range protection equal to the body pressure rating. Differential pressure transmitters with ratings to 68.9 MPa (10,000 psig) are available. To safely depressurize, a transmitter should be supplied with a bleed fitting; i.e. a vent valve.

The standard process connection is $^1/_2$ NPS (Nominal Pipe Size.) The pressure connections are female NPT (National Pipe Thread) dry seal threads according to ASME B1.20.3-1976 and SAE J476-2013. This provides a leak free connection using standard pipe fittings and a thread compound.

Typical temperature limits for a transmitter measurement cell are –40 °C to 105 °C (–40 °F to 220 °F). However, many process temperatures are higher. Normally this is not a problem since the transmitter sits at the end of a dead leg which is considerably cooler than the process. However, if a condensable vapor is being measured, circulation occurs that brings the hot vapor in contact with the diaphragm so additional protection is needed. See 8.3.5 for further information concerning condensing vapors.

Terminals are provided to attach the signal cable to the transmitter. The terminals accept wire sizes from 16 AWG to 24 AWG or spade lugs. The terminals are in a NEMA 4X or a corrosion resistant IEC 60529 IP 65 enclosure. Hermetically sealing can be used especially if parts are sensitive to moisture or have to meet electrical hazard requirements. The standard North American electrical connection is a $^1/_2$-14 NPT female connection but elsewhere other connections, such as the IEC M20 size, can apply.

5.4 Pressure Transmitter Performance

5.4.1 Intelligent versus Analog Transmitters

5.4.1.1 Intelligent Transmitters

An intelligent pressure transmitter is a digitally based device that consists of a transducer, digital processor, and output section. The output section produces a 4-20mA signal or a serial output using protocols such as Fieldbus or HART. An intelligent transmitter provides improved accuracy, reduced commissioning effort and a better life cycle than an analog transmitter.

According to IEC 60770-3-2006, “An intelligent transmitter is an instrument that uses digital data processing and communication methods for performing its functions and for safeguarding and communicating data and information on its operation. It may be equipped with additional sensors and functionality which support the main function of the intelligent transmitter. The variety of added functionality can for instance enhance accuracy and rangeability, self-test capabilities, and alarm and condition monitoring.”

Provided by : www.spic.ir

Copyright American Petroleum Institute

Using sensor characteristics stored in memory to linearize the output, intelligent pressure transmitters offer larger turndown ratios than legacy analog transmitters. The digital processors also compensate for changes for ambient temperature and static pressure effects. This allows one transmitter size to serve several applications, decreasing maintenance inventories.

Rather than recalibrate, the span and zero are changed by setting configuration parameters. Further, re-ranging can be performed remotely from the facility control system. This is particularly useful during start up and commissioning. When digital transmission is used the measured variable is transmitted as a floating point value in engineering units making re-ranging un-necessary. Intelligent transmitters have capabilities that include the calculation of the square root for head flow meters, electronic storage of the transmitter tag, firmware information, and calibration data as well as internal statuses that help improve reliability. Diagnostic capabilities include detection of plugged impulse line, process noise/variation, pressure transients, and electrical loop problems. Also internal logging of abnormal events is possible.

Compensated gas flow measurement is possible using multi-variable transmitters which are capable of measuring differential pressure, temperature and static pressure in one device. A multi-variable transmitter is able to provide a serial output for the three variables in engineering units as well as the actual differential pressure.

5.4.1.2 Analog Transmitters

Analog transmitters consist of just a primary sensing element and signal conditioning electronics and do not have significant dead time. Other than providing a signal that is proportional to the process input they offer none of the features found with intelligent transmitters. Most significantly, range changes require recalibration. Consequently, almost all transmitters currently marketed for the process industry are intelligent digital-based devices.

Analog hydraulic pressure transducers, for use with metal stamping, servo mechanisms, etc., are capable of response times in the 2 msec to 50 msec range. They have a small process terminal volume and the sensor directly mounted on the process isolation diaphragm. Also there are differential transmitters that are intended for mostly dry non corrosive applications for used in aerospace applications and clean rooms with a similar response time.

Most of these devices, particularly the differential transmitters, are not robust enough for oil refining, petrochemical, or commodity chemical facilities. With few exceptions, there is one diaphragm material offered and they have various sizes and types of process connections. Their installed accuracy is less than instruments that are designed for the process industries. They have limited over range capabilities and proof pressures. Adjustment of the zero and span is on the order of ±10 % and is intended only to compensate for drift. Many do not have the dual process seals required by Section 501.15(F) (3) of the National Electrical Code.

5.4.2 Pressure Transmitter Performance Characteristics

The following performance characteristics are applicable to pressure transmitters and depending on the application can affect their performance:

a) static error;

b) repeatability;

c) hysteresis;

d) sensitivity;

e) ambient temperature effect;

f) rapid temperature changes;

Provided by : www.spic.ir

Copyright American Petroleum Institute

g) static pressure effect;

h) long term stability;

i) dynamic performance;

j) warm-up time;

k) steady state supply voltage;

l) transient supply voltage;

m) temperature and pressure rating;

n) humidity;

o) overpressure;

p) salt spray;

q) pressure cycling;

r) insulation resistance;

s) vibration;

t) shock;

u) burst pressure;

v) output;

w) enclosure rating;

x) EMI resistance.

It is recommended that these factors be reviewed when considering a transmitter for new applications. Refer to IEC 60770-1 through IEC 60770-3 for testing and evaluation methods.

5.4.3 Pressure Transmitter Accuracy

It should be understood that transmitter accuracy statements are based upon laboratory conditions. The base or reference accuracy is a combined value that includes linearity, hysteresis, and repeatability.

Each application has an installed accuracy envelope determined by reference accuracy, ambient temperature, static pressure, and drift. This information is normally provided on a ±3 Sigma basis. The largest contributors to its error are ambient temperature and static pressure.

The overall uncertainty is the reference accuracy combined with the transmitter drift between calibrations, line pressure effect, ambient temperature effect, and power supply effect. These effects are not added but should be combined using the statistically based “sum of squares” method. The expected installed uncertainty would be the square root of this number.

Provided by : www.spic.ir

Copyright American Petroleum Institute

Since the temperature effect is one of the largest contributors to installed uncertainty, placing the transmitter in a climate control enclosure that maintains the transmitter at 37.8 °C (100 °F), eliminates the temperature effect for applications that require exceptional accuracy; such as a high turndown metering or custody transfer. See 10.8 b) concerning instrument weather protection.

5.4.4 Pressure Transmitter Response Time

5.4.4.1 General

The response time of pressure instrument is an indication of how its output responds to a changing pressure. A fast acting transmitter tracks a dynamic process more accurately, enabling tighter control. A pressure transmitter's response time is a critical parameter for some applications such as compressor anti-surge systems or low flow measurements.

Still, it should be understood that the various suppliers have different goals when they designed their transmitters with response time being one of several factors (e.g. accuracy, production effort, operating range, etc.) they are attempting to optimize.

A pressure transmitter's response is limited by electronic and mechanical delays. Intelligent transmitters have digital processors which have inherent dead times. The response time for an intelligent transmitter with an analog output is dependent on the following characteristics:

— **Mechanical Response**: the time it takes the mechanical sensor to read a pressure change;

— **Sensor Signal Conversion**: the time it takes to convert the sensor signal into a digital format;

— **Signal Processing Time**: the time it takes the processor to calculate the compensated pressure output;

— **Digital to Analog Conversion**: the time it takes for the digital to analog conversion and the electronics output stage to reflect the compensate output.

The response time (T) for an intelligent transmitter is broken down into two components: A First Order Response (T_t) which consists of the mechanical response time and Dead Time (T_d) which include the remaining factors of conversion and processing.

5.4.4.2 First Order Response

A pressure transmitter dynamic first order response time is limited by mechanical delays and to a minor extent by electronic delays. The first order response is the time needed for a device to achieve a 63.2 % output in response to step change. It takes five time constants to achieve a 99 % output.

The mechanical delay is associated with a transmitter's construction. This consists of the process side terminal volume and the pressure capsule construction. There are several factors that influence the time constant:

— process side terminal volume;

— diaphragm and sensor spring rates;

— diaphragm corrugation design;

— diaphragm thickness;

— diaphragm diameter;

— diaphragm displacement;

— sensor spring constant;

Provided by : www.spic.ir

--`,,,`,,,,,,`,`,`,,,,,`,`,,,,,,`,-`-`,,`,,`,`,,`---

Copyright American Petroleum Institute

— fill fluid viscosity;

— fill fluid mass;

— capsule passage sizes.

For process pressure transmitter capsules the fill fluid effects typically dominate the response time. If capillary diaphragm seals are used, the time constant becomes significantly longer.

Older electronic analog process transmitters calibrated for a 25.4 kPa (100 in. $WC_{20°C}$) span typically have response times between 150 msec to 300 msec. Pneumatic force balance transmitters have similar response times but when the signal transmission effects are considered their overall response is much longer.

Since they were essentially identical in mechanical design, the first generation of digital based transmitters was slower than the previous generation of analog transmitters. Subsequent digital based transmitters were designed to take advantage of their computational abilities by using non-linear, faster sensors; smaller, stiffer diaphragms; etc. As a result they are faster than their predecessors plus they have better resolution and repeatability.

The response time for a transmitter design optimized for response is dependent on the device's range. For process transmitters, first order response times typically are between 40 msec to 100 msec. The slowest responding units are the lower ranges where diaphragms are larger and more fill fluid has to be displaced. Lower range instruments (e.g. draft transmitters) have a typical first order response of 200 msec to 650 msec. The digital processing adds 45 msec to these times. Some suppliers have longer processing times but compensate with lower first order times.

5.4.4.3 Dead Time

The dead time is the time lag between when the pressure actually changes and when the output of the transmitter begins changing. The transmitter digital processor samples the input, calculates the value and generates the output. The dead time is the total time for performing these three steps.

The dead time can be adjusted two ways, by using a faster digital processor so it performs the steps faster or reduces the resolution of the two conversion steps. However, increasing the scan rate cuts into the instrument's power budget and reduces the processor's time to perform other tasks; e.g. diagnostics. Further, reducing the resolution lowers the accuracy of the instrument.

Installed accuracy has a higher priority than response time so the fastest process transmitters have a total response time between 85 msec to 100 msec. This is adequate for almost every requirement including compressor anti-surge systems. When faster responses are needed proprietary systems with purposed designed equipment are used. For instance, a detonation suppression system uses dedicated discrete logic components and sensors to achieve its task of stopping a flame front.

For calibrated ranges of 7.6 kPa (30 in. $WC_{20°C}$) or greater, it is recommended for general purpose transmitters used in flow, liquid pressure, differential pressure measurements that 175 msec to reach 63.2 % of the actual pressure or less be used. Level and gas pressure transmitters used in general service should have a total response time of 700 msec or less to reach 63.2 % of the actual pressure.

5.4.4.4 Process Piping Response

Process piping also plays a significant role in determining response time and it is often the dominate contributor to the system response. For the best response tightly or close couple installations are needed with 12 mm ($^1/_2$ in.) or larger diameter tubing. Piping for flow meters should be symmetrical.

The equation below can be used to estimate the natural frequency of the impulse piping:

$$f_n = 0.159 \times C \times (L \times (0.5 + (Q/a/L)^{-0.5}$$

Provided by : www.spic.ir

Copyright American Petroleum Institute

where

f_n is the natural frequency in Hz;

C is the speed of sound in ft/sec.

L is the tubing length in ft;

Q is the transmitter volume in ft^3;

a is the tube area in ft^2.

The time constant (T) in sec of the tubing system is determined by the following:

$$T = \frac{159}{f_n}$$

For gas-filled systems, the limiting resonance is commonly the connecting line length being near the quarter-wavelength of the process pulsations. The tubing installation should be adjusted so its time constant is 20 % of the expected process frequency.

For liquid-filled systems, depending on the system geometry the limiting resonance can be either the sensor stiffness plus the inertial properties of the liquid-filled lines or it can be the quarter-wavelength resonant frequency. Gas bubbles in a liquid-filled system can have a significant effect on the resonant frequency and should be purged.

See ISO TR 3313-1998 for further discussion on the effects of pulsations. See 8.13 for further discussion on pulsation filtering and 6.1.2 for discussion of pulsation effects on flow metering.

5.4.4.5 Process Diagnostics

With good dynamic performance and a system that collects high frequency data, process and measurement diagnostics can be performed. The Nyquist–Shannon sampling theorem limits the frequency response of a digital transmitter. The Nyquist-Shannon sampling theorem requires the data has to be acquired at frequency that is more than twice the process frequency, otherwise aliasing or false readings occurs.

Typically, a low-pass filter is set at least a decade above the transmitter dynamic response. This removes the extraneous noise and provides anti-aliasing. Also, prior to this the signal is also sent through a high pass filter to remove the DC component.

A transmitter that takes 25 samples/sec can detect frequencies up to 12.5 Hz. This information can be used to perform process diagnostics. Using data analysis algorithms, pulsations in a fired heater can be measured or plugged impulse lines can be detected.

Still, measuring a process signal is not a simple issue of scanning frequency. The response time of the system should be considered as well. Otherwise, unacceptable signal amplitude errors can occur which could contain important diagnostic information. As a result the filter setting and sampling rate is also based on the response time for the process being evaluated.

5.5 Pressure Gauges

Bellows, spiral Bourdon tube, and C-type Bourdon tube are used as measuring elements for pressure gauges with the most common being the C-type gauge. The range should be approximately twice the normal operating pressure. Too low a range can result in low fatigue life or a zero shift from overpressure transients. Too high a range has

Provided by : www.spic.ir

Copyright American Petroleum Institute

insufficient resolution. ASME B40.1 Accuracy Class 1A; i.e. 1 % of full scale for a new gauge, with a $4^1/_2$ in. nominal case is typically sufficient for process gauges. See Table 9 for ASME accuracy grades. Also, see ASME B40.1 for standard scales for pressure gauges.

Table 9—ASME B40.1 Pressure Gauge Grades

Permissible Uncertainty ± % of Span, Excluding Friction				Minimum Gauge Size (270° Arc)
Accuracy Grade	**Lower $^1/_4$ of Scale**	**Middle $^1/_2$ of Scale**	**Upper $^1/_4$ of Scale**	
4A	0.1			$8^1/_2$
3A	0.25			$4^1/_2$
2A	0.5			$2^1/_2$
1A	1.0			$1^1/_2$
A	2.0	1.0	2.0	$1^1/_2$
B	3.0	2.0	3.0	$1^1/_2$
C	4.0	3.0	4.0	$1^1/_2$
D	5.0	5.0	5.0	$1^1/_2$

To ensure long life and accuracy, pressure gauges should be used at a temperature between –28.9 °C to 65.6 °C (–20 °F to 150 °F). AISI Type 316 Stainless Steel is the recommended measuring element.

For measuring less than 103 kPa (15 psig), bellows type gauges are needed. They have ranges as low as 2.54 kPa (10 in. $WC_{20°C}$) and are available with compound ranges; i.e. they can measure vacuum and pressure. Other than PTFE, FKM, or FFKM diaphragms, diaphragm seals do not work at these pressures. The bellows are available in brass, Type 316 Stainless Steel, and N04400.

To measure pressures less than 2.54 kPa (10 in. $WC_{20°C}$) slack diaphragm gauges are needed. These devices are more intended for HVAC systems than process measurements but have proven to be adequate for furnace draft and dust collector measurements. They are available with a compound range as low as –635 Pa to 635 Pa (–0.25 in. $WC_{20°C}$ to 0.25 in. $WC_{20°C}$) and the wetted parts are a silicone rubber diaphragm, aluminum gauge body and 304 SS internal parts. The alternative is using an inclined manometer.

See 3.9.1 for recommendations concerning pressure gauge application.

5.5.1 Connections

The standard connection for a pressure gauge is a male NPT stem. For strength, the recommended gauge connection is $^1/_2$ in. NPT. Field mounted pressure gauges are bottom connected and usually stem mounted with $^3/_4$ in. pipe fittings to the process tap. Figure 65 shows a typical pressure gauge installation. Flush mounting gauges on local panels are connected to the back, while surface mounted gauges are bottom connected.

5.5.2 Case Material and Size

Either 100 mm or $4^1/_2$ in. gauges are recommended for process services. The cases are made from austentic stainless steel, thermoset plastics, such as Phenol formaldehyde (PF), cast aluminum, and fiber reinforced thermoplastics. Some thermoplastics are not suitable for locations where temperatures could age or deform them. Ceases made from polymers are often ASME style with stand offs. This allows them to be surface mounted. Cryogenic gauges [i.e. –29 °C (–20 °F)] should have a low temperature lubricant and be hermetically sealed to prevent moisture freezing the movement.

Provided by : www.spic.ir

Copyright American Petroleum Institute

5.5.3 Safety Devices

Catastrophic failure is exceptionally rare with Bourdon tube pressure gauges. They are fabricated from a tube with a welded end seal and stem connection. For a typical 4 1/2 in. or 100 mm gauge, a 0 to 103 kPa (0 to 15 psig) stainless steel element ruptures at 13.8 MPa (2000 psig) and a 0 to 414 kPa (0 to 60 psig) stainless steel element ruptures at 32.4 MPa (4700 psig).

However, a solid front gauge with a blowout back or disk to relieve case pressure with a laminated safety glass or polycarbonate window is recommended for process pressure gauges. This prevents the glass and case bursting if the pressure element fails. Gauge supports or heat tracing should not block the blowout back.

Pressure limiting valves are available for preventing over ranging. See ASME B40.6 for further information on pressure limiting valves. Gauges can be equipped with high pressure or vacuum stops as well but these have limited effectiveness.

However, diaphragm seals with a low volume and high pressure rating are the most effective means for protecting against gauge overpressure and a permanent calibration shift. See 9.2.7 for more about the use of pressure gauge diaphragm seals. They also protect Bourdon tubes from trapping condensables in gas services or vapors and other foreign materials in liquid services.

5.5.4 Gauge Damping

Pressure gauge tubes can fail from fatigue. A 4 1/2 in. Bourdon tube pressure gauge can withstand 130 % of its full scale pressure without changing accuracy. So fatigue is unlikely if the pressure cycles stay inside this envelope. Nevertheless, the gauges mechanical movement on low frequency, high amplitude services (e.g. a reciprocating compressor discharge) do fail, causing the gauge to stop performing. If the gauge pointer is fluctuating ±5 % or more, dampening should be provided.

Various pressure snubbers are attached to gauge inlets for dampening. Snubbers work by restricting flow into the gauge. See ASME B40.5 for further information on snubbers. Also gauges are filled with a liquid (e.g. glycerin) which both dampens the gauge and protects the movement from the ambient environment. Fills are effective in keeping the gauge face frost free.

Another method for gauge dampening is a gauge option where a sealed viscous fluid dampens the pinion movement. This option avoids dealing with a plugged snubber or a liquid spill. The measurement time constant is affected regardless of the damping method and over damping can occur resulting in inaccurate readings. See 8.1.3 for further discussion on process pulsation.

5.5.5 Operation and Maintenance

Pressure gauges should be replaced when the following has occurred:

a) gauges that exhibit a span shift ≥10 %. Bourdon walls thinning from corrosion could have occurred;

b) gauges that exhibit a zero shift greater than 25 %; the Bourdon tube likely has residual stresses from overpressure;

c) gauges that have accumulated over a million pressure cycles;

d) gauges with signs of corrosion or leakage;

e) gauges which have been exposed to excessive temperatures;

f) gauges showing friction error or movement wear;

Provided by : www.spic.ir

--`,,,`````,`,`,```,,`,`````,-`-`,,`,,`,`,,`---

Copyright American Petroleum Institute

g) gauges having damaged sockets or threads;

h) liquid filled gauges showing loss of case fill.

ASME B40.1 recommends that gauges not be moved from one application to another. The cumulative number of pressure cycles on a previously used gauge is generally unknown. It is safer to install a new gauge. This also minimizes the possibility of a reaction with the previous media.

5.6 Miscellaneous Pressure Devices

5.6.1 Pressure Switches

5.6.1.1 General

Mechanical pressure switches use diaphragms, bellows, Bourdon tubes, or piston elements to detect process changes. However, since they are not self-checking, they are mostly considered to be legacy devices.

5.6.1.2 Pressure Switch Types

Bourdon tubes, bellows, and diaphragms switches are acceptable. Piston switches are used mostly for hydraulic applications and use moving o-ring seals that can wear. Welded diaphragm switches tend to be the preferred device. The trip points for diaphragm switches vary from 2.54 kPa (10 in. $WC_{20°C}$) to 27.6 MPa (4000 psig).

Diaphragm switches are ideal for applications demanding instrument class accuracy, ±1.0 % of scale, and where pressure pulsations are less than 25 cycles per minute. Diaphragm switches are suitable for use in either positive pressure or vacuum applications. They are not recommended for high pressure fluid applications (e.g. hydraulic rams) where high-shock and high cycle rates are expected.

5.6.1.3 Pressure Switch Application

When selecting a pressure switch, it should be field adjustable. If necessary they can be provided with diaphragm seals. Also a limited selection of dual trip point switches is available.

To have the lowest dead band and the best repeatability, select a low trip point range without over-ranging the switch. The dead band is the difference in pressure between the trip for an increasing input and the trip for a decreasing input and it is a fixed property of the switch. The over range value is the maximum input pressure that can be continuously applied to the pressure switch without causing permanent change of the trip point.

Pressure switch including pneumatic switches should be installed much in the same manner as transmitters. They should be provided with block and bleed valves as wells as the other features outlined in Section 8.

The enclosure needs to be clearly specified. Switches are available in a general purpose, watertight or explosion proof enclosures as well as having an open frame construction.

A DPDT pressure switch is two synchronized SPDT switching elements that actuate together with an increasing input and reset together with a decreasing input. This allows two independent circuits to be switched. However, diaphragm switches travel a few thousandths to actuate the switching element. So with slow moving signals, non-simultaneous switching occurs. Nevertheless, the extra contact is often included to serve as an online spare for switches that are switching loads close to their rating.

Depending on the design, pressure switches provide a fast response to a change in pressure. Some digital switches with a solid state output can respond within 2 msec.

Provided by : www.spic.ir

--`,,`````,,,,``,,,,,,,,,,,,,,-`-`,,`,,`,`,,`---
Copyright American Petroleum Institute

5.6.1.4 Contact Selection

Process changes deflect the sensor and operate a snap-action electrical switch. In process environments, particularly those with high humidity, contact corrosion(e.g. sulfidation and oxidation) needs to be considered for switches operating with 24 VDC logic or measurement circuits. If not addressed over time, the contact resistance becomes unacceptably high. Ordinary switch contracts according to NEMA Standard ICS 5-2000, paragraph 4.1.2 and 4.2.2, are not rated for low voltages and currents. This problem can be addressed in the following ways:

a) use gas tight hermetically sealed switches;

b) provide gold flashing or passivated contacts;

c) providing adequate wetting current;

d) use bifurcated, self-cleaning wiping action contacts;

e) controlling the switch environment.

This list is shown in the recommended order of application. If possible the contacts should be capable of meeting the requirements of IEC 60947-5-4 for low energy contacts. Gas tight hermetically sealed switches contain an inert gas and are nearly impervious to the sources of contact corrosion.

Hermetically sealed switches offer several advantages. They operate well with low energy signals; i.e. ≤7 mA and 24 VDC. Hermetically sealed switches in a NEMA 4X enclosure can meet Class I, Groups A, B,C, and D; Class II, Groups E,F, and G; Division 1 and 2 area ratings and when rated “Dual Seal” they provide the additional barrier needed by Section 501.17 of the *National Electrical Code*, NFPA 70-2011.

Gold flashing and passivated contacts have two potential issues. The gold flashing or passivation layer is lost if it is overloaded or is used in a circuit that has enough current to clean the switch surfaces. Depending on the contacts, it is recommended that the maximum load be less than 100 mA at 24 VDC. Further, depending on the degree of flashing or passivation provided sulfidation could eventually work through the protective layer.

For discrete input circuits wetting current can be provided for standard contacts such as those found in a motor starter by increasing the current flow through the switch. This is accomplished by adding a resistor in parallel with the discrete input. This resistor should be large enough to supply approximately 100 mA at 24 VDC across the contacts.

Self-cleaning contacts use a strong wiping action to assist in removing highly resistive oxidation layers. This allows the current to start flowing so the remaining resistant material is melted. Unless specifically designed for low energy circuits this method is not recommended for use with 24 VDC logic or measurement circuits.

Contact corrosion can also be mitigated by limiting the switch’s exposure to corrosion sources. This is best accomplished by keep the switches in an air conditioned environment protected with corrosion preventing absorbents. However, other than pneumatic receiver switches, this approach has limited practicality.

Mercury bottle switches are not recommended due to their health effects and their ability to cause liquid metal embrittlement. See 3.6.7 concerning the effects of metal embrittlement.

5.6.2 Bellows Meters

In a bellows meter, the bellows is opposed by a range spring assembly. Only limited calibration adjustments with bellows meters are possible. Bellows meters can be line mounted or remotely mounted. Their primary advantage is that they do not require external power. They are used primarily for local flow indication and recording as well as level readings. They are provided in fixed differential pressure ranges from 2.54 kPa to 102 kPa (10 in. $WC_{20°C}$ to 400 in. $WC_{20°C}$) and are available with compound ranges. Reverse acting meters are available for level indicators with wet legs.

Provided by : www.spic.ir

Copyright American Petroleum Institute

At full scale, bellows meters can have a 25 cc (1.5 $in.^3$) internal displacement. When used in vapor or steam service with liquid seals, seal pots should be provided to minimize changes to liquid column as the process load changes. Diaphragm seals are impractical for displacements this large.

6 Flow

6.1 Introduction

This section discusses the selection and installation of the flow instruments commonly used in the refining industry. Custody transfer flow measurements and meter runs are covered in API *MPMS* Ch. 4 (all sections), API *MPMS* Ch. 5 (all sections), API *MPMS* Ch. 6 (all sections), and API *MPMS* Ch. 18 (all sections).

6.1.1 Meter Types

Common devices for flow measurement fall into three categories: head meters, volumetric meters, and mass meters.

Head meters include orifice plates, flow nozzles, etc. Variable area meters are head meters as well. Head meters are based upon Bernoulli's equation which was derived from the principle of conservation of energy. The value displayed by a head meter is Q^2 (ρ) which is an energy based term where Q is the flow rate and ρ is density. This measurement has a positive effect and a negative effect. It is less sensitive to changes in flowing density but the accuracy decreases exponentially with turndown.

Volumetric meters include vortex, magnetic, turbine, positive displacement, and ultrasonic meters. The last four plus Coriolis meters are API recognized. Table 10 compares these meters. Collectively their precision for material balance purposes is within acceptable limits as long as the density is known accurately. See API *MPMS* Ch. 5.1 for further information on meter selection.

There are two common mass meters: Coriolis and thermal meters. The Coriolis meter measures mass regardless of other fluid properties. However, it does have sensitive problems when low pressure gas is being measured.

Thermal meters work best with constant composition gases and they are not pressure sensitive. They measure heat transfer so changes in specific heat or thermal conductivity results in a large loss of accuracy. Further, thermal meters can only measure low liquid flows or operate as a no flow switch.

6.1.2 Flow Profile

To achieve the best accuracy, many flow meters need a symmetrical fully developed turbulent flow profile. To obtain this profile, a straight run of pipe is required prior to the meter so that only the pipe wall friction controls the fluid flow characteristics. Ideally, metering should occur after the point where the profile no longer changes. These run lengths are expressed as multiples of pipe diameters (D).

When fully developed, the profile should be a truncated thimble shape or a flattened ellipsoidal dome with its axis of rotation aligned with the center line of the pipe. Conversely, laminar flow, which is not acceptable for many flow meters, is parabolic in shape.

Except for variable area meters all head meters required some straight run. Also thermal, vortex, ultrasonic, magnetic, and turbine meters require a meter run. The length and surface condition of the meter run is dependent on the meter type, required accuracy, and upstream piping layout. Also, most of these meters also require another shorter run downstream of the element.

The shape of the developed flow profile is a function of the friction factor and Reynolds Number. The friction factor is an empirical relationship between Reynolds number and ε/D with (ε) as the pipe roughness or the height of the pipe wall irregularities and (D) the pipe diameter. This relationship limits the pipe diameter and Reynolds number for many flow meters and why extrapolating empirical meter sizing relationships beyond their defined boundaries is not recommended unless they have been flow calibrated.

Provided by : www.spic.ir

Copyright American Petroleum Institute

The piping layout prior to the straight run has a significant influence on the straight run requirements. For instance, throttling valves required additional diameters over simple disturbances like reducers. The most destructive effect to creating a fully developed flow profile is swirl.

Table 10—Comparison of Flow Metering Technologies

Criteria	PD Meter	Turbine	Coriolis	Ultrasonic
Initial Installation				
Package Size	Poor	Good	Fair	Good
Strainer	Yes	Yes	No	No
Flow Conditioning	No	Yes	No	Yes
Installation Effort	High	Medium	Medium	Low
Proving Needed	Yes	Yes	Maybe	Maybe
Application				
≥ 3,000 BPH	Yes	Yes	Yes	Yes
≥ 10,000 BPH	No	Yes	Yes	Yes
≥ 50,000 BPH	No	No	No	Yes
Flow Rates > Nameplate	Poor	Fair	Poor	Good
≥ 205 °C (400 °F)	No	No	Yes	Yes
≤ –155 °C (–250 °F)	No	No	Yes	Yes
Pressure Class >600#	No	Yes	No	Yes
Pressure Drop	Medium	Medium-High	High	Low
Kinematic Viscosity ≤1 cSt	Poor	Fair	Good	Good
Kinematic Viscosity ≥1000 cSt	Yes	No	Yes	No
Corrosion Resistance	Fair-Poor	Fair	Good	Good
Flashing Issues	No	Yes	Yes	No
Particle Resistance	Poor	Fair	Fair	Good
Cal w/Small Volume Prover	Fair	Good	Fair	Fair
Maintenance				
Service Frequency	High-Medium	Medium	Low	Low
Service Effort	High	Medium	Low	Low
Seal Leakage	Yes	No	No	No
Catastrophic Failure	Yes	Maybe	No	No
Self-Diagnostic	No	No	Yes	Yes
Accuracy				
Undetected K Factor Shift	Fair	Poor	Fair	Good
Re ≤ 3000	Good	Poor	Good	Poor
Re ≤ 10,000	Good	Fair-Poor	Good	Good
Re > 10,000	Fair-Poor	Good-Fair	Good	Good
K Factor Shift with Viscosity	Medium	High	Low	Low

Provided by : www.spic.ir

Copyright American Petroleum Institute

Table 10—Comparison of Flow Metering Technologies (Continued)

Deposit Buildup	Good-Fair	Poor	Good	Fair
Reverse Flow Accuracy	Good	Fair	Good	Good
Accuracy at 10 % Flow	Fair-Poor	Poor	Fair	Good
Overall Accuracy Stability	Fair	Poor	Good	Good
Additional Variables				
Temperature	No	No	Yes	Yes
Density	No	No	Yes	Yes
Viscosity	No	No	No	Yes
Speed of Sound	No	No	No	Yes
Flow Profile	No	No	No	Yes

Swirl is two tangential velocity components at right angles to the pipe axis and is most often formed by two elbows in different planes. It spirals down a pipe as a localized flow vector that is not orthogonal to the pipe axis. Swirl attenuates slowly so it can continue for a hundred or more pipe diameters. Swirl with one tangential component created by back to back elbows in the same plane is not as severe so shorter pipe runs are acceptable. See Figure 16.

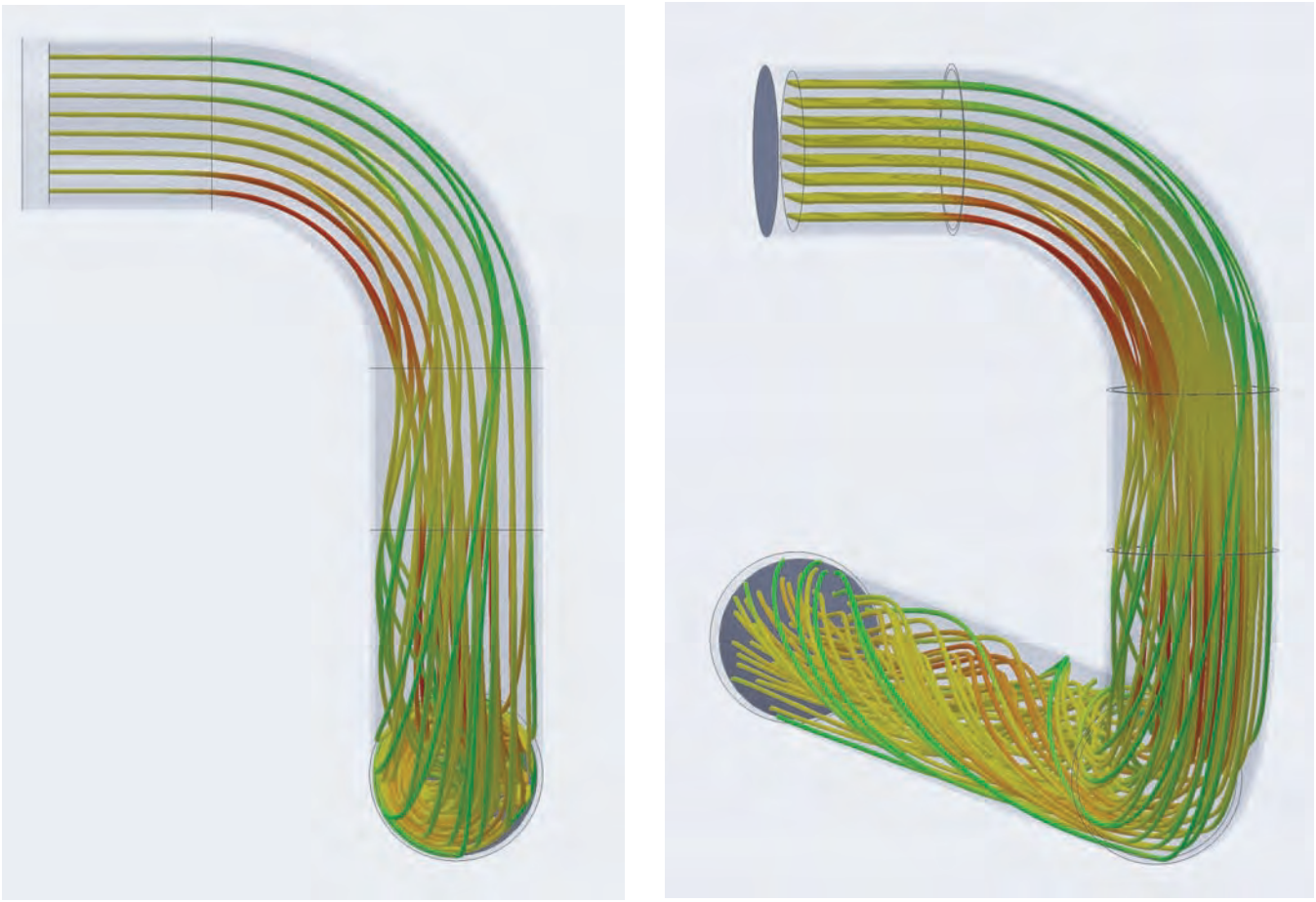

Figure 16—Swirl with Elbows in 90° Planes

Provided by : www.spic.ir

Copyright American Petroleum Institute

Swirl can be produced other ways as well. The combing of two streams at a right angle can generate swirl. A butterfly valve between two elbows or turbine meters can create swirl. Further, a partly open globe valve often can be as bad as swirl. For an orifice meter β of 0.70 at least 38*D* has been determined to be necessary to obtain satisfactory flow conditions. Conversely, a Venturi tube with a β of 0.50, which has more capacity at the same differential pressure, needs just 7*D* and 16*D* is needed for a 0.70 β.

Besides selecting meters which are less sensitive to the piping effects, flow conditioners can be provided to reduce the straight run requirements. The ASME, AGA, and API traditional flow conditioners based upon parallel tube bundles have been shown to have limited effectiveness.

Rather research has shown that Zanker plates and proprietary designs that completely breakup the existing flow field and allow it to reform is more effective. Zanker based devices are a non-proprietary design that is recognized by the major flow standards.

Other designs redirect the stream creating canceling flow vortices. Regardless of their origin, flow conditioners should meet the requirements of a major flow standard. ASME MFC-3M-2004, Section 1-6.4.1 is a typical standard.

Two dimension flow arrays can be used to correct for asymmetrical flow profiles but they cannot correct for swill alone. Nor can they correct for the porpoising or undulations, which are caused by two elbows in the same plane. Both these flow conditions have flow vectors that are tangential to the pipe axis so a positive bias occurs because these tangential components are measured by the array elements.

ISO TR 12767, *Guidelines on the effect of departure from the specifications and operating conditions given in ISO 5167*, provides factors for adjusting head flow meter conditions for non-ideal conditions such as, significantly reduce run lengths or excessive pipe roughness.

6.1.3 Pulsation

Measurement of pulsating flow is difficult. Pulsations come from sources such as poorly controlling loops, compressor surge, residual swirl, or other pipe installation effects. Pipe organ type resonances can be set up in attached piping. This measurement condition is not dependable and pulsing can contribute to the wear of positive displacement meters, turbines, and other mechanically based meters.

Pulsating flow affects head type flowmeters. A responsive or high frequency measurement system is important for differential flow metering due to the “square-root” effect. A systematic error results from taking the square root of the average differential pressure rather than the average of the instantaneous square root of the differential pressure so a high flow measurement results. For control systems with a slow scan rate, to reduce the “square-root” effect it is recommended that the flow calculation be performed by a fast acting transmitter.

See 5.4.4.4 on frequency effects on process piping. See ASME PTC 19.5-2005 and ISO TR 3313-1998 for further information on flow pulsation.

6.1.4 Two Phase Flow

The measurement of two phase flow is problematic. Generally, this type of measurement is only needed at well heads and with gathering systems. See API *MPMS* Ch. 20.3 and ASME MFC-19G, for detailed recommendations.

6.1.5 Flow Meter Orientation

For liquid flow meters the piping layout should be arranged to ensure that line is always full. For downwards flowing liquid that is discharging into in a vessel vapor phase or to the atmosphere, flow separation can occur in the pipe. Also separation can occur on horizontal runs prior to the pipe turning down.

Provided by : www.spic.ir

Copyright American Petroleum Institute

So to ensure that the line is liquid full the meter can be located in a vertical run with upwards flow. For downwards flow a device, such as a control valve, should be used that is able maintain an enough liquid velocity to prevent backwards flow of the vapor past it. Otherwise, to avoid vapor entrainment and ensure flow without pulsations, a Froude number less than 0.3 is recommended. Horizontal meters can be provided with an inverted “U” liquid seal to ensure a liquid full line.

Also, in some circumstances gas has been known to form pockets of gas at high points which can result in stratified flow. While maintaining the Bernoulli energy balance the liquid static pressure can drop below its vapor pressure as liquid is pumped upwards. Also control valves can produce vapor pockets created by flashing that influence the meter accuracy.

If metering in vertical upwards flowing lines is not possible and this is reoccurring problem, vapor eliminators could be necessary. See 6.6.2 concerning the application of vapor/air eliminators.

Gas flow metering is not as problematic but downwards flow is recommended for metering steam and other condensing services such as flow from a compressor discharge. In wet gas services upwards flow has resulted in damaging slug flow when liquid is swept up from low spots. Conversely, with vertical downward flow “annular-mist flow” flow is mostly experienced due to the gravitational and gas dynamic forces acting in the same direction. This flow regime is uniform and provides a consistent low noise flow signal.

6.1.6 Meter Bypass

The need for a meter bypass and block valves is determined by the application. In services where shutdown is undesirable, bypasses are provided for service and calibration. However, for custody transfer, bypasses are not recommended. Further, head type flow meters usually do not require bypasses. In pipeline applications meter replacement can be accomplished using an online orifice change out fitting.

If bypassed, the meter should be in the main run, with the line size block valves placed beyond the meter’s upstream and downstream pipe runs. The bypass valves should be capable of positive shutoff to prevent measurement errors. Also bypass installations should be free draining.

6.2 Head Type Flow Meters

Head meters are the most commonly used method for flow measurement. Except for rotameters, head meters measure flow using the differential pressure caused by flow passing through a primary element. They include orifice plates, Venturi tubes, averaging Pitot tubes and similar devices. Flow is proportional to the square root of the differential pressure. The differential pressure ranges generally run from 2.5kPa to 50kPa (10 in. $WC_{20°C}$ to 200 in. $WC_{20°C}$), regardless of the meter size.

For ordinary differential pressure transmitters the discharge coefficient and the gas expansion coefficient should be calculated based on the normal flow and normal metering differential pressure at the normal operating conditions.

The following equation can be used to determine the normal metering differential or sizing differential for the bore calculation:

$$\text{Normal Metering Differential} = \left[\frac{\text{Normal Flow}}{\text{Maximum Flow}}\right]^2 \times [\text{Maximum Flow Differential}]$$

This ensures that the correct Reynolds number, pressure ratio, etc. are used to determine the discharge coefficient and the expansion coefficient.

At the design flow rate, the largest contributor to flow metering error is the uncertainty associated with the discharge coefficient. Since the square root of the differential pressure is used, the transmitter becomes the largest error

Provided by : www.spic.ir

--`,,```,,,,````-`-`,,`,,`,`,,`---

Copyright American Petroleum Institute

contributor as lower flow rates are measured. So a range of 3:1 is generally recommended unless special provisions are made.

Regardless of the transmitter accuracy, the discharge coefficient is sensitive to changes in the Reynolds number especially with liquids. Multiple transmitters that are installed in parallel or stacked with discharge coefficients calculated for their portion of the Reynolds number can be used for wide range applications. An arbitration scheme should be used when deciding when to switch from one transmitter to another. Typically two transmitters in parallel is the maximum, before running into low range issues.

At low flows the noise fluctuations do not decrease to the same degree that the differential signal does. With transmitters with low sample rates, these fluctuations can drive the uncertainty to an unacceptable level. Further, with liquids differences both in tap temperature and impulse line length need to be considered.

For extended ranges that use a single transmitter, online corrections have to be made to the discharge coefficient. It is possible to achieve a turndown ≥12:1 with a differential flow transmitter when the following is provided:

a) clean fluids;

b) tightly coupled process connections;

c) highly accurate measurement element;

d) online pressure and temperature inputs;

e) fast sample rate;

f) continuous recalculation of the discharge coefficient;

g) the sensor is optimize for square root readings.

Still, errors can accumulate unless the transmitter is monitored for drift and temperature influences.

Uncertainty calculations according to API *MPMS* Ch. 14.3.1-2012, Section 1.12.5 should be made to determine the meter system performance.

Also the interior finish and ID of the pressure taps affects head flow meters. A poorly fabricated tap with rounded edges can add as much a 1 % to the systematic error. Further, the pressure error in a square-edged pressure tap is a function of the tap shear velocity and the tap diameter. Using a smaller diameter tap tends to reduce this error.

However, it is difficult to make a small tap that is free from burrs. Burrs of a height greater than about 0.008 times the tap diameter magnify the tap error. Similarly, rounding of the tap or locating the tap at positions other than normal to the surface also increase the tap error.

When making pressure taps there should be no change in the tap diameter (A) for a distance ≥2.5A from the inner pipe surface. A distance of 5A is preferred. Also, see Figure 18 and Figure 66 concerning the tap diameter and depth for Venturi flow tube and orifice plates.

Lastly, the pressure at the vena contracta, which is the point of maximum velocity, should be above the vapor pressure to avoid cavitation or flashing. If this does occur and the meter cannot be located elsewhere (e.g. upstream of a control valve), the differential pressure should be reduced, and the meter should be placed at a lower elevation to obtain the necessary static head.

Provided by : www.spic.ir

Copyright American Petroleum Institute

6.2.1 Orifice Plate

6.2.1.1 Concentric Sharp-edge Orifice Plates

Orifice plates are the most common head type flow element because of their ease of fabrication and their well-established methods for determining their discharge coefficients. An advantage of orifice plates is their repeatability. Orifices can be installed without being calibration at a flow laboratory.

Due to extensive research, the uncertainty for concentric sharp-edge orifice plates is superior to other head meters. Among its abilities is that it can measure flow bi-directionally with a compound range transmitter. The metering uncertainty associated with the discharge coefficient of a sharp-edge orifice plate is a function of the β ratio and the Reynolds number. For Re ≥10^8 and β between 0.2 and 0.7 the maximum 2σ uncertainty is 0.5 % and for a Re of 7000 the maximum uncertainty increases to 0.75 %.

For concentric sharp-edge orifice plates, the Reader-Harris/Gallagher (RG) equations, which are the basis of the various flow standards [20] is valid for pipe IDs ≥50 mm (1.67 in.), over Reynolds numbers from 4000 to > 36,000,000 and bores larger than 11.4 mm (0.45 in.). The edge sharpness criterion sets the bore limit.

The limitations for orifice plates include their susceptibility to damage and erosion by entrained material. The pipe and bore diameter have the largest effect on the accuracy followed by edge sharpness so erosion greatly affects the reading.

6.2.1.2 Conic, Quadrant Edge, and Eccentric Orifice Plate

Eccentric orifices or segmental plates are used for dirty fluids, slurries, or wet gases; conic and quadrant edge orifice plates are used for viscous liquids.

For Reynolds numbers ≤4000 conic or quadrant edge orifice plates are recommended. They should be designed according to ISO TR 15377-2007, Section 6.1 and Section 6.2 respectively. However, without a flow calibration these devices have a 2 % coefficient of uncertainty. Both types of plates use corner taps and for quadrant edge orifice plates above 40 mm ($1^1/_2$ in.) ID flange taps are acceptable.

Eccentric orifices are recommended for slurries and dirty fluids. ISO TR 15377-2007, Section 6.1 covers their sizing and design. Ideally, the pressure taps should be diametrically opposite the point where the orifice is tangential to the pipe wall. Since the eccentric orifice is usually located at the top or at the bottom of the pipe, problems can be created with vapor entrainment if the taps are at the top of the pipe or they can become blocked by debris when they are located at the bottom. In these cases, it is acceptable to rotate the taps 30° from the pipe vertical centerline without incurring unacceptable metering uncertainty. However, rotating the taps 90° from the recommended position can increase the systematic error as much as 2 %.

6.2.1.3 Meter Run Requirements for Orifice Plates

A straight run of upstream and downstream pipe is necessary to develop a uniform profile. MFC-3M-2004, Table 2-3 and ISO 5167-2-2003 Table 3 provides straight run lengths for β ≤ 0.20 to 0.75 with various piping configurations without flow conditioners. Potential blockage cause flow conditioners mostly to be used with custody transfer metering systems.

[20] There is a difference of discharge coefficients of less than 0.1 % of ASME-3M and ISO equations when compared to the API, AGA, and the Gas Producers Association (GPA) standards for beta ratios between 0.35 and 0.60 and for line sizes 100 mm ≤ D ≤ 600 mm (4 in. ≤ D ≤ 24 in.). See ASME MFC-3Ma;2007. Appendix 2B. Also, ISO and ASME use a β based limit as well to determine the minimum Reynolds number, while API uses simple Reynolds number limits.

Provided by : www.spic.ir

Copyright American Petroleum Institute

Columns A and B in Table 3 provided different run requirements with an additional 0.5 % uncertainty assessed against the values in Column B. The advantage of Column B is that the run requirements are generally about half the value required by Column A.

For conditions not covered by ISO 5167-2-2003, ISO TR 12767-2007 Table 3 provides factors to adjust the Discharge Coefficient and Table 4 provide equations to determine the resulting increased uncertainty. Meter run lengths from 4*D* to 16*D* are listed. Table 11 lists the upstream conditions covered by ISO TR 12767-2007.

Table 11—Non-Ideal Flow Run Conditions Covered by ISO TR 12767

Symmetrical enlargement, tapered or abrupt	Butterfly valve, fully open
Single short radius 90° elbow	Butterfly valve, 52° open
Two 90° ells in plane, U or S layout, ≤10*D* spacer	Gate valve, fully open
Two 90° ells at right angles, no spacer	Gate valve, 2/3 open
Two 90° ells at right angles, 5*D* to 11*D* spacer	Gate valve, 1/4 open or globe valve
Two 90° miter ells at right angles, no spacer	

Typically, for piping design purposes, meter runs conform to ISO 5167-2-2003, Table 3 Column B based on a 0.75 β. Meter runs based upon Column A are mostly provided for custody transfer meters.

Also for custody transfer metering systems API *MPMS* 14.3.2-2007, Table 2-7 provides an alternate set of straight run requirements that is similar to the lengths in Column A. However, in some cases additional pipe diameters are required, particularly with the configurations that involve swirl. Also API *MPMS* Ch. 14.3.2-2000 adds a column for a half open block valve.

Also, since the flow profile is a function of surface roughness, the pipe interior finish needs to be acceptable. This especially true with smaller pipe with larger β ratios. Still, mill grade pipe is usually satisfactory for ordinary flow measurements. For more detail on orifice plate installation, refer to API *MPMS* Ch. 14.3.1 for piping layout and roughness criterion.

6.2.1.4 Orifice Meter Differential Pressures

Research indicates that, for gas flows, the relative magnitude of the differential pressure noise starts increasing as the metering differential pressure drops to around 10 % of the calibrated value. Without special provisions (e.g. as a fast sampling, accurate transmitter) it is recommended that the lower bound on the orifice differential pressures for gas flows should be 6 in. $WC_{20°C}$ and that measurement pressures above 20 in. $WC_{20°C}$ are preferred particularly for a β ≤ 0.50. See 6.1.3 for more information. Conversely, API *MPMS* Ch. 14.3.2-2000, Appendix 2-E allows flow metering to up to 1000 in. WC. These differential pressures result in changes in measurement of less than ±0.1 %.

Originally, the accepted metering differential pressure was 100 in. $WC_{20°C}$ due to limits in the data and the measurement devices but research has extended the applicability of orifice plates to a wider range of Reynolds numbers, differentials, etc. while lowering the uncertainty associated with the discharge coefficients.

Still, the use of 100 in. $WC_{20°C}$ remains the starting for point selecting a metering pressure since it tends to result in a good combination of instrumentation and process conditions. It produces an acceptable pressure loss, avoids most issues with expansion coefficients, is in the area of best instrument accuracy and tends to result in line size meter runs. This makes it possible to use a single transmitter type with standard span limits.

For orifice plates to limit the expansion coefficient systematic error to ≤ 0.5 % for vapors, the ratio of the differential pressure to the absolute pressure in the same engineering units should result in a dimensionless number of 0.035 or less. For other differentials the expansion error can be estimated by calculating the expansion coefficient at the

Provided by : www.spic.ir

Copyright American Petroleum Institute

maximum flow rate and the base rate that the meter is being sized to meet. See Figure 19 for how expansion coefficients changes with pressure ratio and flow rate. Also, due to empirical equation limits, expansion coefficients are limited to a pressure ratio of ≤ 0.25, even for continuously compensated readings. See API *MPMS* 14.3.1-2012, Section 8 for further information on the application of the empirical expansion factor.

6.2.1.5 Orifice Construction

The plate thickness may be between 0.005D and 0.05D. However, a thickness up to 3.2 mm (0.125 in.) is acceptable when D is between 50 mm and 64 mm (2 in. and 2.5 in.).

The following sizes are the typically default orifice plate thicknesses:

— 3 mm ($^1/_8$ in.) for line sizes 2 in. to 8 in.;

— 6 mm ($^1/_4$ in.) for line sizes 10 in. to 14 in.;

— 10 mm ($^3/_8$ in.) for line sizes ≥16 in.

API *MPMS* Ch. 14.3.2-2000, Appendix 2-E provides the minimum plate thickness for differentials up to 254 kPa (1000 in. $WC_{20°C}$). These thicknesses are for temperatures not exceeding 65 °C(150 °F). For temperatures >65.5 °C (150 °F) the maximum allowed differential pressures would need a downwards adjustment at higher temperatures. ISO TR 12767-2007 provides an alternate method for determining the maximum differential pressure based upon the modulus of elasticity. ASME Section IID furnishes information on a material's modulus of elasticity at different temperatures.

However, increasing the differential pressure affects fluid velocity and permanent pressure losses. The pressure loss, the Joule-Thompson effect, noise, erosion, and thermowell vibration should be considered.

Due to limits in orifice fabrication, bore calculations should be rounded to nearest thousandth in millimeters (mm) or ten thousandth for inches. See API *MPMS* Ch. 14.3.1-2012, Table 2-1 for bore tolerances.

A weep hole may be used with orifice plates for wet steam or wet gas service. Conversely, vent holes may be provided for liquids with entrained gas. The recommended upper limit for the area of the hole is 0.75 % of the bore area. The largest hole should be 12 mm ($^1/_2$ in.) and the smallest 2.5 mm ($^3/_{32}$ in.). Holes should not be provided for pipes less than 50 mm (2 in.). The taps should be orientated so that they are between 90° and 180° to the position of the drain hole. [21]

Concentric and other type of orifice plates at a minimum should be manufactured from Type 316 Stainless Steel but other materials can be used for corrosive services. Paddle type orifice plates should be fabricated according to the requirements of ISA RP 3.2 or PIP PCFFL000. See Figure 17 for the installation of an orifice plate between a pair of orifice flanges.

The plate handle should be engraved on the upstream side with the following six lines of information: UPSTREAM; measured orifice bore; the instrument tag; flange size, rating and facing; plate material; and type of plate. The size of the weep hole, if any, should be provided on the seventh line. The lettering should be at least 5 mm ($^3/_{16}$ in.) high and laser engraved if possible otherwise larger lettering should be provided on a wider paddle. The paddle length should be increased to ensure that information on the handle is outside the pipe insulation. The hole in the paddle handle should be at least 6 mm ($^1/_4$ in.) in diameter.

[21] See ISO TR 15377-2007, Section 5.1.2 on the method for adjusting the discharge coefficient and uncertainty term to account for vent and drain holes.

Provided by : www.spic.ir

Copyright American Petroleum Institute

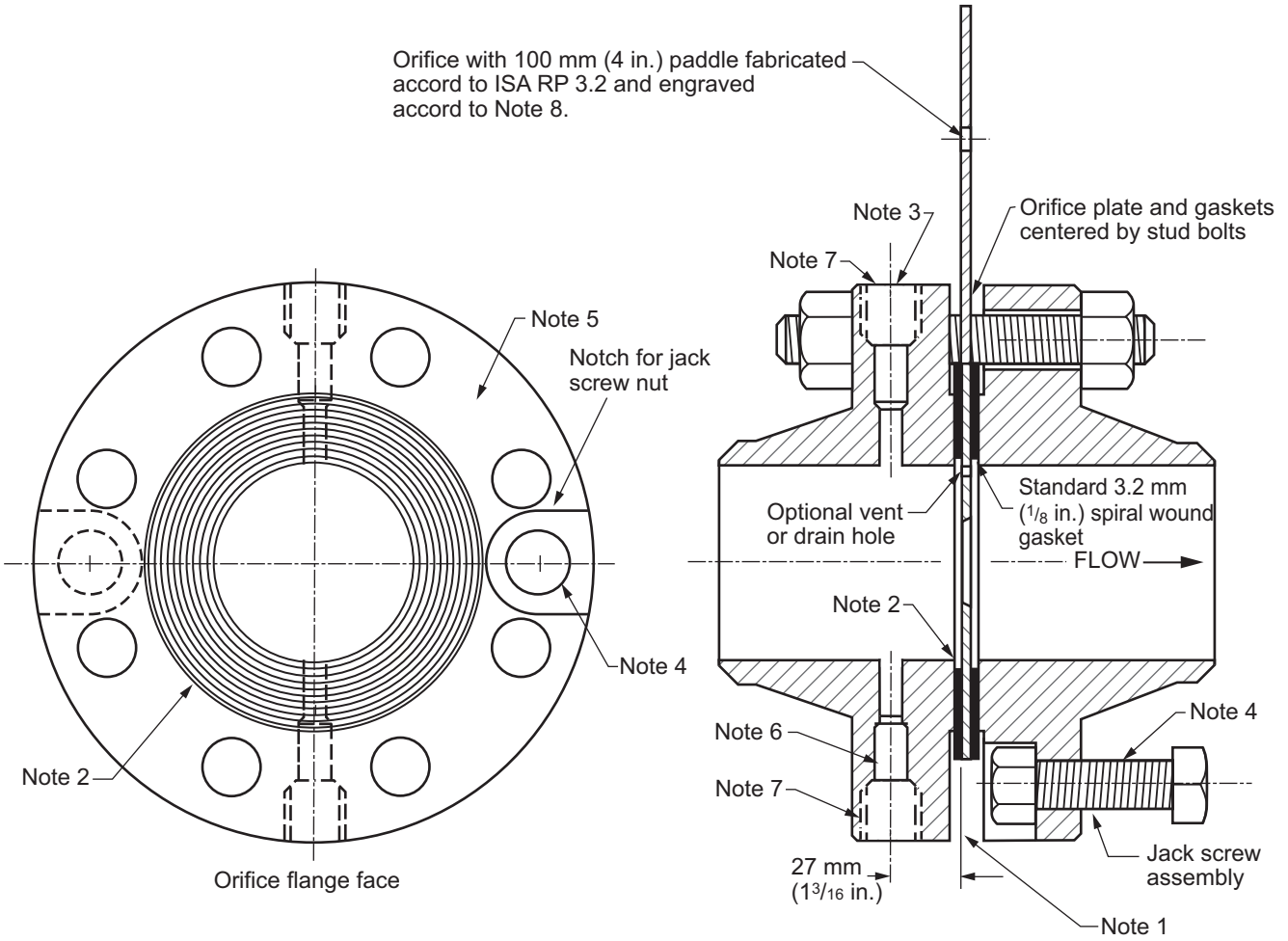

NOTE 1 The tap dimension from the flange face exceeds the standard 25.4 mm (1.0 in.) when 3.2 mm (1/8 in.) spiral wound gaskets are used. For ≥ 0.4 β 2 in. and 3 in. NPS and ≥ 0.65 β for sizes 4 in. NPS and larger, repositioning the tap 1.59 mm (1/16 in.) closer to the flange face should be considered. See API *MPMS* Chapter 14.3 for the effect on the metering accuracy by non-standard orifice tap placement.

NOTE 2 Spiral wound gaskets require a minimum surface roughness. Appendix C of ASME PCC-1 recommends a 3.2 to 6.4 µm (128 to 250 µin.) finish.

NOTE 3 With Class 900 and higher flanges, 3/4 NPS SW connections have been used for additional strength.

NOTE 4 A jack screw hole with an associated notch in each flange of the pair is provided to help spread the flanges while installing the orifice plate.

NOTE 5 To avoid interfering with the orifice paddle repositioning the jack screws one bolt removed from the pressure taps may be considered.

NOTE 6 The tap diameter (D) of the orifice flanges smaller than 3 in. is 6.4 mm (1/4 in.) and the tap diameter for a 3 in. flange pair is 9.5 mm (3/8 in.). These diameters should be maintained for a minimum distance of 2.5D from the pipe ID. Otherwise, the standard tap diameter is 12.7 mm (1/2 in.).

NOTE 7 Unless otherwise specified, two taps 180° apart are drilled into an orifice flange.

NOTE 8 Engrave UPSTREAM; measured bore; the instrument tag; flange size; ratings, and facing; plate material; and plate type. The size of the weep hole, if any, shall be placed on the seventh line.

Figure 17—Orifice Flanges

Provided by : www.spic.ir

Copyright American Petroleum Institute

6.2.1.6 Honed Orifice Runs and Integral Orifices

Due to roughness and eccentricity criterion the minimum line size for an ordinary orifice is for pipe IDs ≥50 mm (1.67 in.). For smaller sizes down to 1/2 in. prefabricated honed runs with small bore orifice plates are used that are designed according to ASME MFC-14M-2003, Figure 4. Standard corner tap orifice flanges are used but to ensure eccentricity alignment pins are provided.

Integral orifices are a form of honed meter. The various holder and plate designs are proprietary and bores are available in fixed sizes. See Figure 18 for a typical integral orifice metering section. They used similar and at times the same equations for determining the discharge coefficient. They also have integral centering features and corner taps.

Prefabricated honed orifice runs are a bit more flexible in that they have custom bores. Unlike integral orifice fittings, flange ratings above Class 600 are available and are not limited in their materials of construction.

To avoid issues with edge fabrication, half inch lines with small bores and low Reynolds numbers can use quadrant edge orifices. Integral orifice plates are also available with jewel inserts for measuring exceptionally small flows but sintered filters are recommended to keep them from plugging. Jewel orifices should be flow calibrated. See ASME MFC-14M on how to determine the discharge coefficients for small bore sharp-edge orifice plates. ISO TR 15377-2007, Section 5.2 provides an alternate sizing method based on the Reader-Harris/Gallagher equations.



Figure 18—Integral Orifice Meter Run

6.2.2 Flow Tubes

Flow tubes are used where high capacity and minimum head losses are needed. There are several designs but the classical Herschel Venturi tube is perhaps the most commonly used. It has a well-established discharge coefficient and is recognized by ASME MFC-3M and ISO 5167-4. At the cost of some pressure loss, the lay length can be shorted by using a 15° outlet divergent with a truncated outlet. See Figure 20 for sizing and dimensional information. Their advantages are repeatability, low permanent loss, applicability to measure slurries and dirty fluids. Since the lowest pressure always occurs at the throat, unlike an orifice plate, the pressure differential in flow tubes and nozzles will always be positive, so reverse flow could go undetected.

Flow tubes can be fabricated in rectangular and eccentric shapes. The former is used in air ducts and the latter is resistant to plugging by coke chunks.

The flow tubes are free of Reynolds number effects; that is the discharge coefficient does not change with flow. Nevertheless, flow tube expansion coefficient changes are more significant than those for orifice plates. See Figure 19 for how the expansion coefficient changes with pressure ratio and flow rate. However, due to limited experimental data, ISO 5167-4;2003 warns that a simultaneous use of extreme values of D, β, and Re should be avoided or the uncertainty is likely to increase. Conversely, Appendix B of ISO 5167-4-2003 provides additional discharge coefficients for Reynolds numbers below those listed in Figure 20 as well the increased uncertainty associated with these discharge coefficients.

Provided by : www.spic.ir

--`,,`````,,`,,`,,`,,`````,,--,,,,,,,,---

Copyright American Petroleum Institute

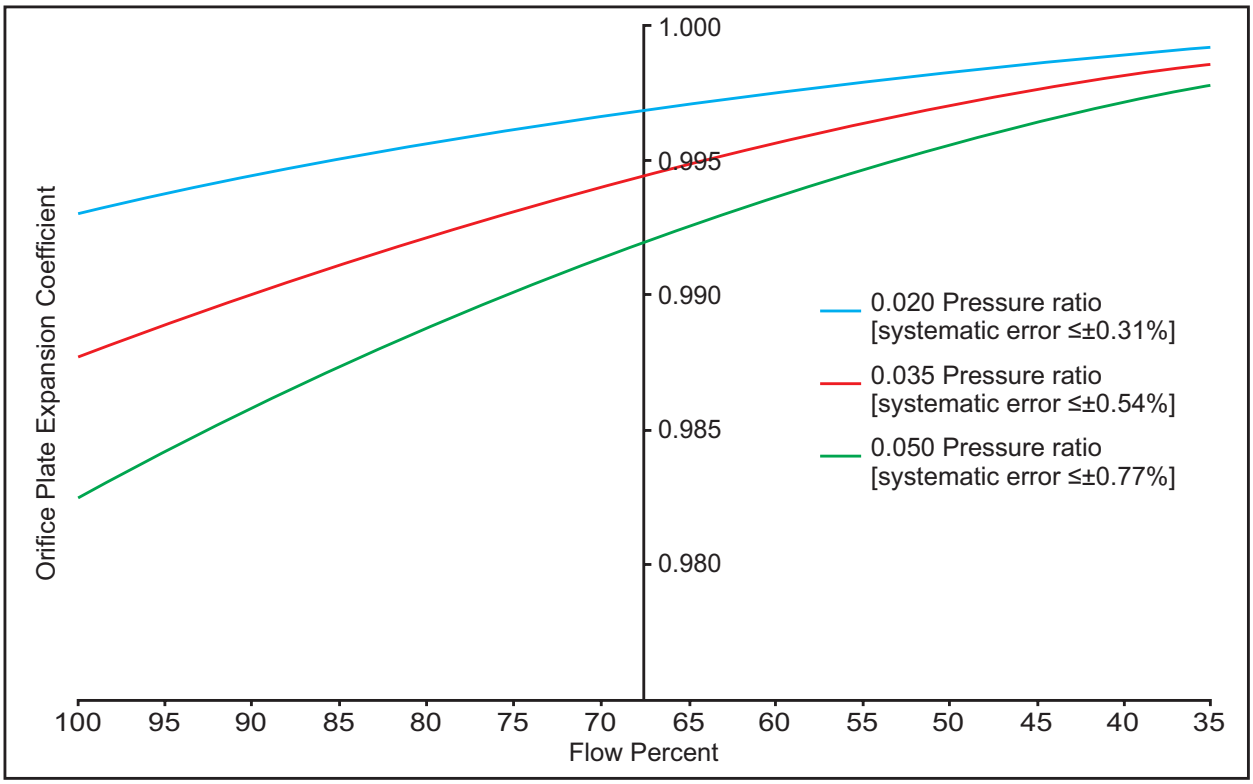

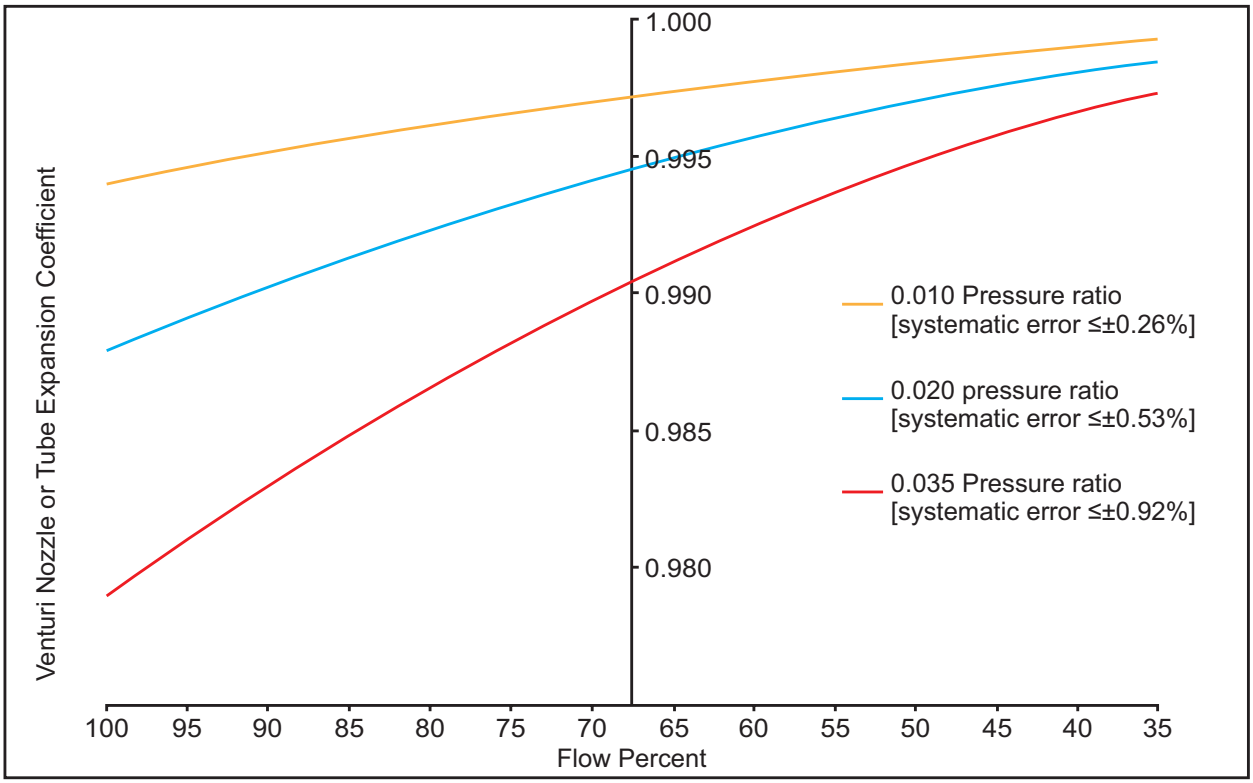

Figure 19—Example Expansion Coefficients

Provided by : www.spic.ir

Copyright American Petroleum Institute

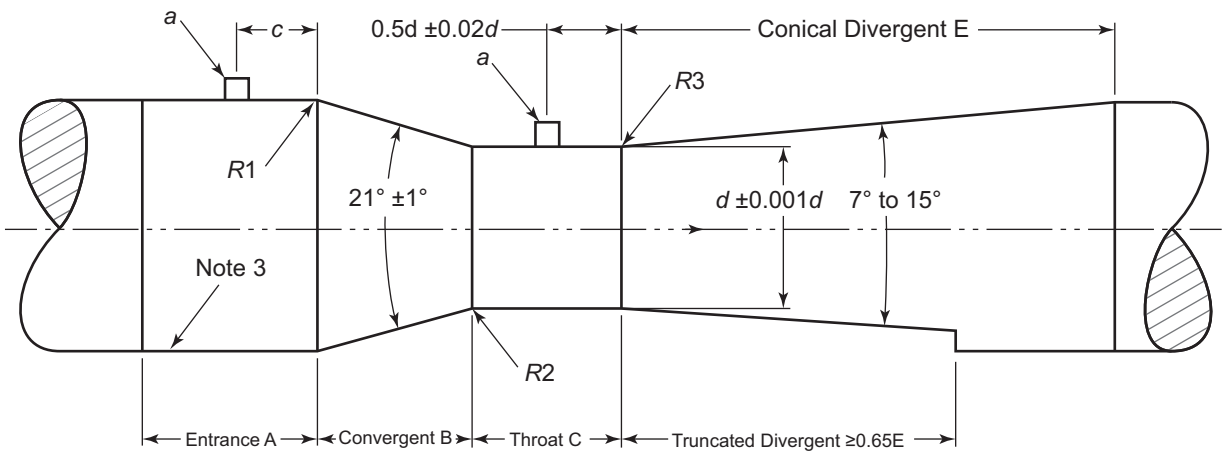

Fabrication Method

Type A: "Cast with Throat and Entrance Cylinder Machined"

Type B: "Cast with Throat, Conical Convert, and Entrance Cylinder Machined"

Type C: "Manufactured by Welding Sheet Iron"

Type	Discharge Coefficient	Uncertainty	β ratio	Reynolds Number	Size Limits
A	0.984	±0.7 %	$0.3 \le \beta \le 0.75$	$2 \times 10^5 \le Re_D \le 2 \times 10^6$	100 mm (4 in.) to 1200 mm (48 in.)
B	0.995	±1.0 %	$0.4 \le \beta \le 0.75$	$2 \times 10^5 \le Re_D \le 1 \times 10^6$	50 mm (2 in.) to 250 mm (10 in.)
C	0.985	±1.5 %	$0.4 \le \beta \le 0.70$	$2 \times 10^5 \le Re_D \le 2 \times 10^6$	100 mm (4 in.) to 1200 mm (48 in.)

Fabrication Method	Dimensions										Finish Roughness R_a (Center Line Average Value)			
	A		C		R1		R2		R3		A Entrance Section	B Conical Convert	C Throat	E Conical Divergent
	Rec.	Limits	Rec.	Limits	Rec.	Limits	Rec.	Limits	Rec.	Limits				
Type A	≥D	>0.25D +250mm (10 in.)	d	>0.33d	1.375D	+20 %	3.625d	+0.125d	10d for outlet α = 7°	5 to 15d increasing with decreasing α outlet	$\le 10^{-4}D$	$\le 10^{-4}D$	$<10^{-5}d$ preferably ≤0.5 x $10^{-5}d$	Rough cast, smooth and clean
Type B	≥D	—	d	>0.6d	Zero	≤0.25D	Zero	≤0.25D	Zero	≤0.25d	$\le 10^{-4}D$	$\le 10^{-4}D$	$<10^{-5}d$ preferably ≤0.5 x $10^{-5}d$	Rough cast, smooth and clean
Type C	≥D	—	d	—	Zero	Note 1	Zero	Note 1	Zero	—	$\le 10^{-4}D$ Note 2	$\le 10^{-4}D$ Note 2	$<10^{-5}d$ preferably ≤0.5 x $10^{-5}d$	Smooth and clean

a = 4 to 10 mm (0.16 to 0.40 in.) ID but <0.1D for upstream taps and <0.13D for throat taps

c = 0.50D ±0.25D for 100 mm (4 in.) ≤ D ≤ 150 mm (6 in.) and

$c = 0.50D \,^{+0D}_{-0.25D}$ for 150 mm (6 in.) < D ≤ 800 mm (32 in.)

$B = 2.7 \times (D - d)$

NOTE 1 Curvature due to welding allowed.

NOTE 2 Clean free from encrustation. Height of internal weld seams ≤0.05D.

NOTE 3 Upstream pipe with center line average value roughness $\le 10^{-4}D$ for ≥2D.

Figure 20—Classical Venturi Tube Dimensions

Provided by : www.spic.ir

Copyright American Petroleum Institute

A straight run is necessary but it is significantly shorter than the run recommended for an orifice plate. ASME MFC-3M-2004, Table 4-1 and ISO 5167-4-2003, Table 1 provides straight run lengths for $\beta \leq 0.20$ to 0.75 with various piping configurations. Further, the standards provide rules for when upstream fittings exist in series. Also, there is no provision for upstream throttle valves.

Columns A and B in Table 3 provided different run requirements with an additional 0.5 % uncertainty assessed against the values in Column B. The run requirements in Column B are generally about half the value required by Column A.

The pipe runs are measured from the taps so the downstream pipe is often not needed. Still, they are more difficult to fabricate. They should be mounted in vertical pipe when it is necessary to drain condensed liquids or if the liquid contains some gases that could become trapped at the top of the pipe.

6.2.3 Flow Nozzles

When used as head meters, long radius flow nozzles are repeatable, have a low permanent head loss, and have 65 % more capacity than an orifice plate with the same beta. Their Reynolds number limits run from 10^3 to 10^6 with a minimum size of 50 mm (1.96 in.). A straight run of upstream and downstream pipe similar to an orifice plate is necessary. Their limitations are they are difficult to fabricate, only have a 2 % uncertainty coefficient, and have limited application with viscous liquids. Other than high Reynolds number steam measurements, they are not often used because flow tubes have better performance while the fabrication effort is similar.

Flow nozzles are also used as critical flow elements for gas measurements. In this case they are not differential producers but rely on the principal that once sonic conditions are achieved at the throat, further velocity increases are not possible. So the mass passing through the nozzle is a function of the upstream density, which is calculated from the pressure and thermodynamic properties.

Other than swirl, critical flow meters are mostly unaffected by disturbances with the inlet stream. Because the mass flow is determined by the state of the gas stream at the inlet to the nozzle, a differential pressure measurement is not used to determine the flow.

Since flow has a linear relationship with inlet pressure, this permits approximately three times wider metering range. This does not come without consequences. With fixed downstream conditions, the pressure loss across the critical flow meter is nearly proportional to the flow. Also, with the high flows and a low downstream pressure, the exit velocities can be supersonic. The resulting shock wave produces acoustic noise and turbulence.

Critical flow elements have 0.5 % uncertainty. They have also been used to measure purge flow on high pressure reactor loops. The problem with this metering method is when the process stream is shutoff downstream of the meter rather than showing no flow it indicates maximum flow.

The stability and accuracy of sonic flow devices make them suitable for use as a master meter element for custody transfer applications. In a critical flow meter the velocity is fixed at Mach 1 at throat. So the discharge coefficient is only a function of the throat Reynolds number.

Because the Mach number varies with the flow in a subsonic head flow meter, the discharge coefficient is a function of both the Mach number and the Reynolds number. Consequently, the discharge coefficients of critical flow meters have substantially lower uncertainties than their subsonic counterparts.

An abrupt approach device, such as the square edged orifice, has a choked flow condition but it is affected by pressure downstream. This is a sonic condition but flow is not determined solely by the inlet conditions. So, at fixed inlet conditions, the flow can increase up to 11 % as the downstream pressure is reduced from the value required to establish sonic velocity, down to zero pressure. This is caused by the changing shape of the vena contracta downstream of the orifice.

Provided by : www.spic.ir

Copyright American Petroleum Institute

The large pressure drop required to reach sonic velocity, results in a correspondingly larger variation in the thermodynamic characteristics. To obtain the lower uncertainty with a critical flow meter, more accurate gas properties are required. These terms are determined using calculations from fluid property research. Otherwise, it would be necessary to use a larger error tolerance.

ASME PTC 19.5-2004, Section 8 and ISO 9300-2005 supply further information concerning the sizing and use of critical flow nozzles.

6.2.4 Cone Meter

The cone meter is useful due to its resistance to upstream disturbances and short installation requirements. The cone meter acts as its own flow conditioner. Depending on pipe installation, the cone meter can be installed with zero to five upstream pipe diameters and zero to three downstream diameters. They are available in sizes from $^1/_2$ in. NPS upwards and like many meters is only limited by the availability of calibration facilities.

Signal noise is less for a cone meter than an orifice plate. As a result, it is applicable for wet gas measurement and pulsing flow. Also since the element is mounted in the center of the pipe liquids or gases travel around it. To ensure its mechanical strength gussets are recommended for cones three inches and larger.

The cone meter should be flow calibrated to determine its discharge coefficient. The discharge coefficient is nominally constant when its Reynolds number limits are observed. When properly calibrated, the meter is able to achieve a 0.5 % uncertainty with liquids.

The meter is no longer patent protected but there are a limited number of suppliers. Plus it has limited recognition by standards authorities.

6.2.5 Multi-Hole Orifice Plates

Multi-hole orifice plates are similar to cone meters in that they are resistant to disturbances in the flow stream so shorter flow runs can be used. They have the advantage that they use standard orifice flanges. They have similar pressure recovery to an orifice plate with a similar area blockage, uncertainties between ±0.5 % to ±1.0 % and a 2D stream and downstream run requirement. However, in some case these meters use proprietary sizing techniques. More over, they are patent protected so there are a limited number of suppliers.

6.2.6 Wedge Meters

The wedge meter is intended for slurries, viscous, corrosive, and erosive fluids. The meter can measure flow bi-directionally. It is available in any pipe size but since it has to be flow calibrated its use tends to be restricted to difficult fluids.

The wedge has a triangular shape. The slanting of the upstream face to the oncoming flow creates a scouring action that helps keep it clean. The restriction is characterized by the H/D ratio, where H is the height of the opening below the restriction. Like an orifice beta the H/D can be varied. The restriction has no critical dimensions and can withstand significant erosion without biasing the discharge coefficient.

A calibrated element can have a 0.5 % discharge coefficient uncertainty. An uncalibrated element has an uncertainty of 2 % to 5 %. The discharge coefficient is stable for Reynolds numbers ≥500. It is also insensitive to velocity profile distortion and swirl requiring only five pipe diameters of upstream pipe. Testing has shown that the coefficient is biased less than half a percent.

Due to the fluids involved the wedge meter is often used with a diaphragm seal differential transmitter. Section 9.2 discusses further the use of diaphragm seals with wedge meters. The meter body can incorporate flange connections or studding outlets that allows direct connection of a diaphragm seal transmitter with 3-in. diaphragms.

Provided by : www.spic.ir

--`,,,`````,`,`,```,,`,`````,-`-`,,`,`,`,`---

Copyright American Petroleum Institute

6.2.7 Elbow Meters

Elbow meters are used where sufficient fluid velocity exists and accuracy is not necessary. They are frequently used to add a flow meter into a facility by using an existing elbow. Advantages include repeatability, economy, easy installation, bi-directionality, low pressure loss, and minimum upstream pipe requirements. However, they produce extremely low differential pressures.

6.2.8 Pitot Tubes

Pitot tubes are used where minimum pressure drop is needed and accuracy is not of concern. They measure flow at one point. They can be installed while operating. A Type “S” (Stauscheibe) or reverse Pitot-static probe is recommended for hot tap installations and liquid services. Boost Venturi probes are used to amplify the measured velocity pressure in a flowing fluid. The flow is accelerated in the Venturi passage, as in a flow nozzle, so the pressure differential reading is higher than that obtained with a regular Pitot probe.

A straight run of upstream and downstream pipe is necessary. They are dependence on a fully developed flow profile for accuracy and the representative flow position changes with the Reynolds number. They usually monitor the flow at $0.25R$. Error is introduced by Reynolds number variations that change the flow profile. Since the flow profile is also a function of the pipe surface roughness it should be known as well. Pitot tubes also need a low range transmitter and they can plug.

The bending moment and vortex shedding harmonics should also be evaluated. See ISO 3966 for the application and use of Pitot tubes. Also the requirements of ISO 7145, should be followed.

6.2.9 Averaging Pitot Tubes

Averaging Pitot tubes are used where minimum pressure drop is needed. Averaging Pitot tubes sample flow along one axis. Since they do not use flanges, they are economical for large lines. They are proprietary devices based primarily on the sensor shape. Uncalibrated uncertainty typically is 1.0 % for liquids and 1.5 % gas but with calibration 0.5 % uncertainty is achievable. They can be installed while operating. They require a low range transmitter especially in low pressure gas service and require a fully developed, turbulent flow profile. Also tap blockage is a concern. A straight run of upstream and downstream pipe is needed but their run requirements are less than a standard orifice plate. Further, Averaging Pitot tubes can be mounted $2D$ from an elbow but prior to the elbow additional straight run requirements apply.

The construction of the averaging Pitot tube should be able to operate with the temperature, pressure, flow rate, and process medium. They can be fabricated from corrosion resistant materials. Since the primary element is installed within the fluid stream, each application should be designed to withstand the loads imposed due to pressure and flow dynamics; i.e. the bending moment and vortex shedding harmonics.

Averaging Pitot array tubes, also known as Pitot rakes, measure a two dimensional flow profile across large flow conduits; e.g. furnace air ducting, stacks, or large diameter pipes. With a limited straight run some of the proprietary designs are effective at measuring flow especially when located immediately downstream of a honeycomb style airflow cell. See ISO 3966 and ISO 7194 for the application and use of Pitot tubes in two dimensional arrays.

6.3 Variable-Area Meters

6.3.1 General

Variable-area meters are used as indicators, transmitters, or flow switches. The meter has a linear scale, a relatively large range and a low pressure drop. Variable area meters, also known as rotameters, are head meters.

Provided by : www.spic.ir

Copyright American Petroleum Institute

In 1909 a German company developed the rotating, self-stabilizing float. Their brand, Rotameter, became a synonym for variable area meters. Conversely, the generic term variable area meter is used because the tube area is continuously expands from bottom to top.

A variable area meter consists of a vertical tapered tube that holds a float with a density that is greater than the fluid. The travel of the float is directly proportional to the flow rate.

The meter works by creating a dynamic equilibrium. The float rises until the forces (i.e. buoyancy, gravity, and friction) are balanced. The pressure drop across the meter is mostly a result of the float weight. At the balance point, the flow is directly proportional to the annular area between the tube and the float.

6.3.2 Variable Area Meter Characteristics

Variable-area flow accuracy is independent of pipe arrangements. Elbows, throttling valves, etc. essentially have no effect on measurement uncertainty. However, some variable meters can be damaged by shock.

Small meters are often provided with integral needle valves. For liquid service they are usually on the upstream side. For gas services the valve should be located opposite the side with the most consistent pressure. Additionally, the meter and valve are often combined with a differential pressure regulator to create a flow regulator. These modifications make them ideal for purge services. Section 9.4.4 discusses the application of purge variable meters.

Variable area meters are self-cleaning to a degree. Fluid flowing between the tube and the float provides a scouring action which discourages material buildup. However, if the solids are abrasive depending on the concentration, size and solid type, the weight and shape of the float could change. Also fiber building up on the float can be an issue. Lastly, slugs of solids can plug the meter.

Variable area meters are primarily calibrated with water or air at standard conditions. For sizing the data is adjusted for density. For a particular tube size different floats are available for changing the range. There could be three or four floats that provide a 2:1 range shift. Also tubes and line sizes overlap so in some instances more than one tube size could be used for a given line size. Conversely more than one line size can be used for a given tube size.

Advantages of variable area meters include:

a) 10:1 turndown is typical;

b) linear output;

c) small sizes available;

d) straight pipe run not needed;

e) jacketed meters available for use with heat transfer fluids or steam;

f) liners and alloys available for corrosive fluids;

g) with one moving part, indicators do not needed maintenance;

h) less sensitive to density being a head meter.

Limitations of variable area meters include:

a) limited size availabilities above 4 in. NPS;

b) due to loss of magnetism, straight through magnetic meters are limited to ≤315 °C (600 °F);

Provided by : www.spic.ir

Copyright American Petroleum Institute

c) direct reading meters can be a safety hazard;

d) standard full scale accuracy between 2 % and 10 %;

e) conventional meters are installed vertically;

f) changing the range requires a new float and recalibration;

g) minimum back pressure requirements for gas applications;

h) metal accumulation on magnetic floats.

6.3.3 Variable Area Flow Meter Accuracy

There are two methods for expressing variable area flow meter accuracy. The first method is described in ISA RP16.6, are stated in terms of a full scale reading over a fixed range typically a 10:1 turndown. VDI/VDE 3513 Sheet 2-2008 is the other method.

According to VDI/VDE 3513-2 uncertainty is expressed by parameters G and q_G:

G is the constant error in percent of actual flow that is above the limit q_G;

q_G is the value in percent of full scale, generally 50 %, below which the error increases.

See Figure 21 for a plot showing the region of constant error and the nonlinear error.

6.3.4 Viscosity

Variable area meters are fairly insensitive from the effects of viscosity. The kinematic viscosity upper limit runs from 1 to 50 cSt. This insensitivity tends to increase with meters size. Further, with a UVC calibration similar to that made for a turbine meter they can operate with kinematic viscosities up to 500 cSt. Lastly, some spring loaded designs have kinematic viscosity independence up to 500 cSt.

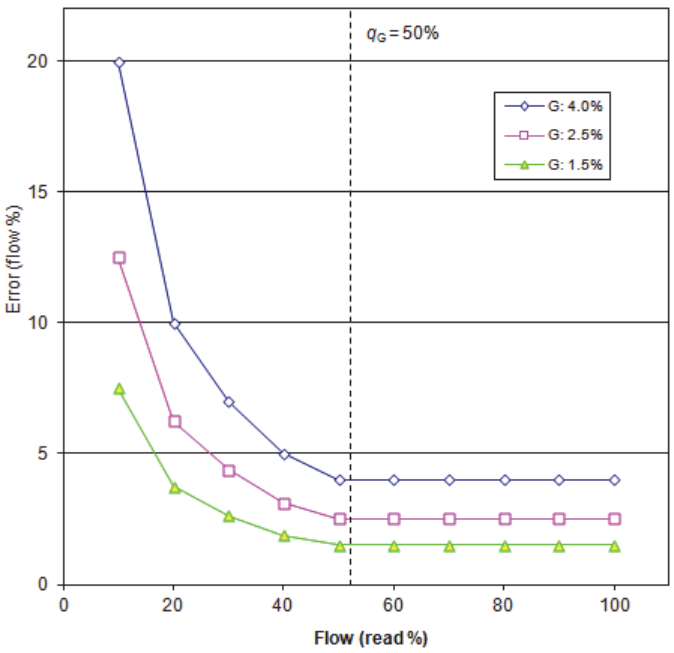

Figure 21—VDI/VDE 3513-2 Variable Meter Accuracy Plot

Provided by : www.spic.ir

Copyright American Petroleum Institute

6.3.5 Direct Reading Variable Area Meters

Direct reading variable area meters use glass or clear plastic tubes. The standard direct reading variable meter has vertical connections but depending upon the design, it might be able to specify end, side, or rear connections. Horizontal connections permit rotating the end fittings in 90° increments. Horizontal connections also permit using a meter with top and bottom cleanout ports.

Because of safety and environment issues, direct reading meters should be limited to use with air and uncontaminated water at pressures ≤689 kPa (100 psig).

6.3.6 Metal Tube Variable Area Meters

The float in a metal tube variable area meter is magnetically coupled to an external indicator. They normally use stainless steel tubes but other non-ferrous tubes are available. The standard metal tube meter has vertical through flow connections; i.e. connections at the top and bottom. Most flanged metal tube meters have a 250 mm ($9\frac{13}{16}$ in.) face-to-face dimension, but longer lengths can occur with flange ratings above Class 300, use of plastic liners, and sizes larger than a 2 NPS.

Horizontal variable area meters are available. The float operates in equilibrium with a spring rather than gravity. However, the spring is in the fluid stream so clean non-corrosive fluids are recommended.

Extended temperatures up to 540 °C (1000 °F) extension tube meters are available. The fluid enters from the bottom and leaves out the side with extension mounted at the top. For dirty fluids, purging of the extension could be necessary.

Upstream magnetic filters are recommended for metal tube meters when the liquid contains metal particles. The magnets should be coated to protect against corrosion.

6.3.7 Installation

When a critical volume between the throttling points up and downstream of the meter is exceeded, float bounce can occur. To prevent bounce, the following are recommended.

— Select a meter with a low pressure drop.

— Keep the pipe short from meter to the throttling point.

— Increase the pressure.

Connecting pipe should be the same size but, in no case, more than or less than one pipe size different than the meter connection size. Standard meters, which use gravity to return the float to the rest position, should be installed within 5° of vertical.

A metal tube meter should be installed in a location that is free from vibration and has clearance for removing the float for service. For older designs, a section of straight pipe could be necessary for float guides that lift past the outlet flange and a removable spool for those meters where the guide drops below the inlet flange. Metal tube meters should be mounted away from strong magnetic fields.

Block and bypass valves are recommended for meter startup when liquid hammer or flashing can occur. The valves should be the same size as the meter. Pipe connections for variable-area meters are shown in Figure 22. Pipe should be supported so a load is not imposed on the meter.

Provided by : www.spic.ir

Copyright American Petroleum Institute

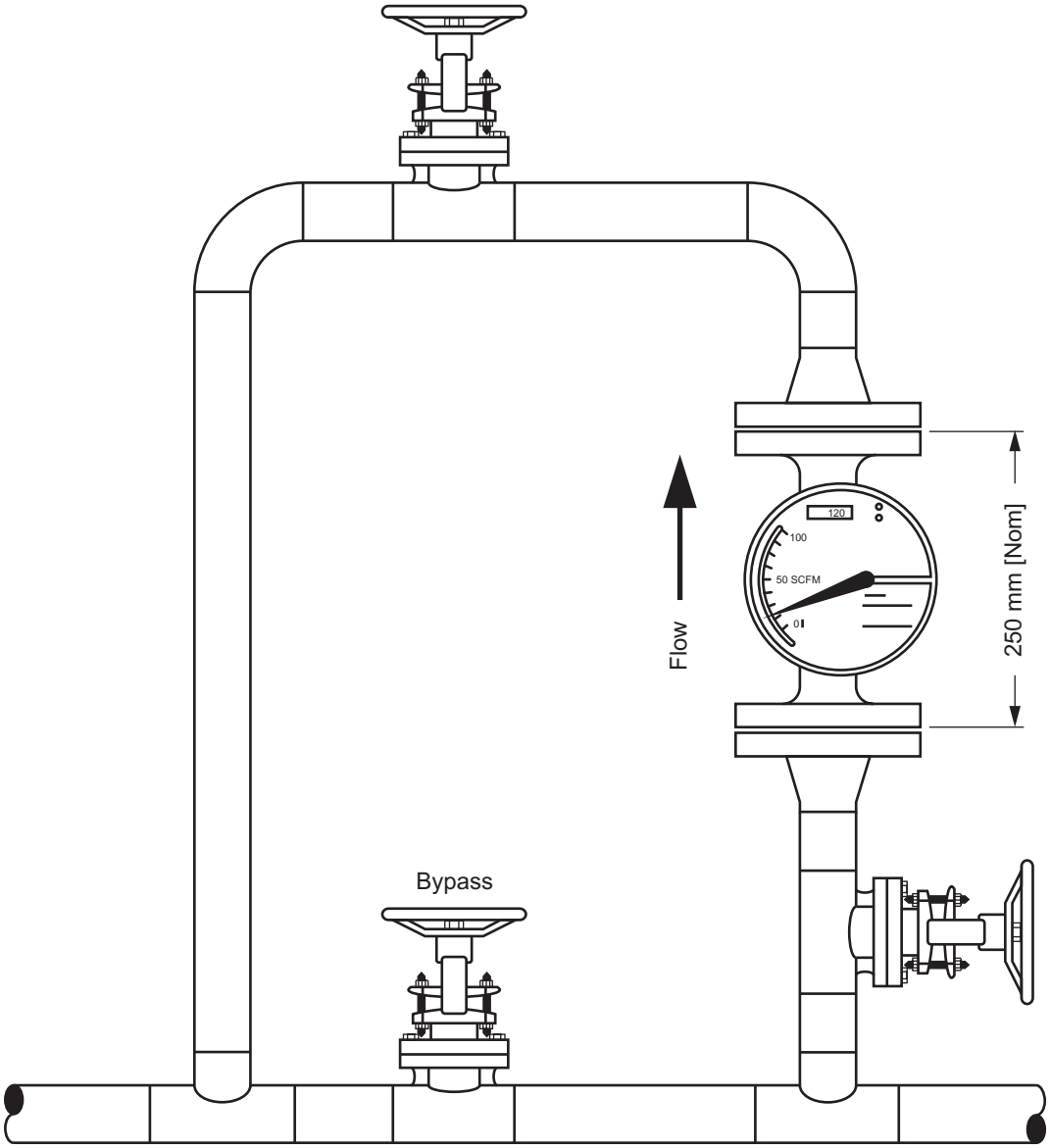

Figure 22—Variable Area Meter Installation

6.4 Magnetic Flowmeters

6.4.1 General

Magnetic flowmeters are one of the most common, versatile, and accurate metering methods available. A magnetic flow meter measures the volumetric flow of liquids that are electrically conductive. Petroleum hydrocarbons have insufficient conductivity to be measured with magnetic flow meter; therefore, use in petroleum industry applications is limited to water, acids, emulsions, and other conductive liquids.

A magnetic flow meter consists of two parts; a primary element, installed directly in the process line and a secondary element, the electronic transmitter. The meter generates a signal proportional to the volumetric flow rate.

The typical fluid minimum conductivity is 5 µS/cm. Below this value electrical noise becomes a problem, which manifests itself as an oscillating signal. Still, some meters operate below 0.5 µS/cm. A higher conductivity

Provided by : www.spic.ir

Copyright American Petroleum Institute

(e.g. 20 µS/cm) is needed for de-ionized or de-mineralized water due electrode polarization from the water breaking down into hydrogen and oxygen.

Magnetic flow meter transmitters operate with either AC or DC power sources. Power requirements typically range from 15 to 60 VA. However, meters intended for high noise applications or older designs could require as much as 300 VA.

Two wire, loop powered meters are also available. At this power level magnetic meters can be used in intrinsically safe systems. However, their performance is compromised. Typically, 50 µS/cm is the minimum conductivity needed; sizes for lines larger than 8 in. NPS are unavailable and their response time is less.

Since these meters do not have an obstruction, magnetic flowmeters are widely used with slurries. As only the liner and electrodes are in contact with the process stream they work well with corrosive fluids. They are also suitable for viscous fluids or where negligible pressure drop is desired.

Magnetic flowmeters have the following advantages:

a) accurate (0.2 % to 1 % of actual rate);

b) velocity measurement that is unaffected by Reynolds number;

c) unaffected density, temperature and pressure changes;

d) turndowns from 30:1 up to 1000:1;

e) they can be used to measure bidirectional flow;

f) can work with asymmetrical flow profiles as well as Non-Newtonian fluids;

g) fluid temperatures from –40 °C to 260 °C (–40 °F to 500 °F) can be handled;

h) fluid pressures from full vacuum to ≥13.8 MPa (2000 psig);

i) insignificant pressure loss;

j) line sizes range from 0.1 in. to 120 in.;

k) unobstructed flow paths that reduce plugging;

l) low maintenance, no moving parts;

m) handles slurries including heavy particulates;

n) suitable for corrosive fluids;

o) submersible and buriable configurations available;

p) can measure bi-directional flow.

Magnetic flowmeters are limited by the following characteristics:

a) requires conductive fluids so it’s not viable with hydrocarbons or organics;

b) limited applicability with de-ionized water; ≤20 µS/cm;

Provided by : www.spic.ir

--`,,,````,`,`,```,,`,`````,-`-`,,`,,`,`,,`---

Copyright American Petroleum Institute

c) special care is needed for erosive applications;

d) not usable at temperatures ≥175 °C (350 °F);

e) there are limitations with some liners at vacuum conditions;

f) special grounding applies;

g) flange bolts require a correct even torque;

h) needs minimal stress loads to avoid liner cutting and cold flow as well as coil damage.

See ISO 6817-1992 for further information on magnetic flowmeters.

Magnetic flowmeters have to contend with signal to noise issues. Meters generate signals on a microvolt/meter/second basis. For instance, a typical meter produces a flow signal of 76 µV/m/sec (250 µV/ft/sec.) The maximum flow velocity is about 9.1 m/sec (30 ft/sec) which produces an output of 7.5 mV. At these levels, it does not take much electrical noise to obscure the flow reading. Listed below are some of the noise sources:

— stray voltage in the process liquid;

— capacitive coupling between signal and power circuits;

— capacitive coupling from connection leads;

— electromechanical EMF induced in the electrodes by particles in the fluid;

— inductive coupling from the magnets inside the meter.

The noise significantly affects the design and installation of magnetic flow meters.

6.4.2 Magnetic Flow Meter Types

6.4.2.1 General

The traditional AC and DC preferences are no longer meaningful. It is often difficult to distinguish the type of excitation being used and there is an overall convergence in meter capabilities.

6.4.2.2 Pulsed Excitation Meters

Low frequency pulsed DC excitation is often used with ordinary fluids. Their cabling is not stringent. The progressive buildup of electrode and liner coatings can be tolerated without affecting performance. In-situ zero adjustments are not necessary since the drift is eliminated. Reverse flow changes the signal polarity so bi-directional flow can be measured.

The DC pulse design is also preferred because it does away with the induced voltage problems. Except for some special circumstances it has all but eliminated the conventional AC meter. Moreover, many existing installations have been retrofitted with a pulsed DC electronic secondary.

However, the standard pulsed DC meter signal is noisy with the following process conditions:

— large quantities of vapor is entrained in the fluid;

— slurry particles are not uniform;

Provided by : www.spic.ir

Copyright American Petroleum Institute

— incomplete blending;

— the solid phase is not homogeneously mixed;

— the flow is pulsing at a frequency ≤15 Hz [22].

For the above conditions, continuous excitation magnetic or high power pulsed DC flowmeters are recommended for approximately 15 % of applications. For exact batch totals, custody transfer, environmental quality monitoring, or if more than one to three seconds of damping is needed to eliminate noise, it could be better to use continuous excitation.

6.4.2.3 Continuous Excitation Meters

Magnetic meters can use continuous excitation to increase the speed of response. Since the response time is quicker, flow changes are tracked accurately. An AC voltage creates a magnetic field which produces a varying voltage across the electrodes. The amplitude of the voltage is proportional to the fluid velocity. AC or current reversing flowmeters are bi-directional, but the signal polarity is the same regardless of flow direction, so they are unable to detect reverse flow without assistance.

Since a continuous alternating magnetic field is used, continuous processing and full integration of the signal is possible. It is possible to avoid signal aliasing because the signal can be measured continuously or is sampled at frequencies more than twice the excitation frequency.

The zero stability problems of the original AC meters have been eliminated. The meters are equipped with various auto correction features; e.g. secondary coils to compensate for in-phase induced voltages or use more than one frequency. Also, these devices can contain circuitry that briefly disrupts the power, automatically zeroing out the effects of process noise; e.g. coatings, on the output signal. The power requirements are also greatly decreased due to more efficient components and better high impedance detection circuitry. With these improvements, continuous excitation is effective for most magnetic metering applications.

6.4.3 Electrodes and Liners

Meters with removable electrodes for cleaning or ultrasonic electrode cleaning devices are available, but with high impedance electronics (i.e. $\geq 10^9$ ohms) combined with pulsed DC excitation or similar AC auto calibration features have nearly eliminated the need for special electrode cleaning.

The principal factors to consider when making liner and electrode material selections are the chemical makeup, operation temperature, pressure, and abrasive characteristics of the process. Also, the maximum velocity plays a role in liner selection. Refer to ASME MFC-16M or supplier information for recommendations on liner selection.

PTFE liners tend to be overused. They provide excellent corrosion resistance and outside of ceramic liners have the highest operating temperatures. Still, they are not as abrasion resistant as other materials. This can be significant in service such as coking quench water services. Also, they are more prone to cold flow.

Vacuum conditions could cause some meter liners (e.g. PTFE) to collapse, particularly in sizes larger than four inches. Steaming, for startup, clean out, etc., could result in vacuum or the overheating that could damage a liner. Vacuum conditions can also occur in the higher sections of liquid siphons.

Ceramics offer a significant alternative in flow meter liner selection. Ceramic materials such as Al_2O_3 are exceptionally abrasion and wear resistant so they are effective in abrasive slurry services such as sand and coke. They handle temperatures up to 200 °C (390 °F) and are not affected by nuclear radiation.

[22] To minimize the noise problem (i.e. hold the fluctuations to within 1 %), filtering of the signal can be used.

Provided by : www.spic.ir

Copyright American Petroleum Institute

Ceramic materials are strong in compression but are brittle. They should not be exposed to forces that cause tension or bending. They should not be subject to a downward temperature step change that exceeds 50 °C (90 °F). Finally, they cannot be used with oxidizing acid or hot concentrated caustic.

6.4.4 Installation

6.4.4.1 General

The magnetic flow meter tube should always be liquid filled to maintain a conductive path between the electrodes. The magnetic flow transmitter tube can be installed in any position; vertical, horizontal or at an angle. The ideal installation is with the electrodes in the horizontal plane.

Upwards flow ensures the pipe stays liquid full and prevents the progressive buildup of solids. Flow vertical upwards could be necessary to avoid erosion along the bottom of the liner. Straight runs also help reduce localized erosion. When abrasive slurries are being measured, vertical mounting with a straight run on the inlet side and upward flow is recommended. This arrangement distributes wear more evenly.

If the tube is mounted horizontally, the electrode's axis should not be in a vertical plane. Vapor running along the top of the pipe can prevent the electrode from contacting the liquid. A slight upward slope, approximately 3 %, helps remove vapors.

In slurry service, meters should not be mounted at low points to prevent buildup. Additionally, the pipe diameter should be larger than the meter's diameter to avoid pockets for solids.

In applications where air or vapor entrainment occurs, the meter should be sized so that the velocity under normal conditions is 1.8 m/sec to 3.7 m/sec (6 ft/sec to 12 ft/sec). For fluids with solids, a minimum velocity of 1.5 m/sec (5 ft/sec) is recommended to minimize coating and solids settling. To protect the liner from erosion from abrasive solids the velocity should not exceed 3 m/sec (10 ft/sec). Velocities up to 4.6 m/sec (15 ft/sec) are acceptable for non-abrasive solids. Installation of upstream ground rings prevents erosion of the leading edge of the meter liner. Low conductivity magnetic meters should be sized so that the maximum flow is about 0.9 m/sec (3 ft/sec). The noise amplitude in these cases is proportional to the flow velocity.

To avoid affecting the magnetic field in systems with steel pipe the meter lengths should not be shorter than 1.5D. For the most part meter tube lay lengths between suppliers are interchangeable since they have been standardized according to ISO 13359-1998.

Graphite gaskets should not be used with some magnetic flowmeters. With these meters, a graphite or other conductive layer could build up on the inside meter tube that the auto zero circuits cannot nullify. Also spiral wound metal gaskets are not recommended with some liners.

The connected pipe needs to transmit minimal stress loads to the meter primary. This avoids liner damage such as cutting and cold flow. Coil misalignment could occur as well. The meter liner is also vulnerable to handling damage. Placing anything through the meter for lifting or gaining leverage is not recommended.

Flange bolt tightening is important for tube operation and life. Bolts should be tightened according to the supplier's required torque values in the correct sequence. Otherwise, liner damage will result.

Integrally mounted secondary electronics is recommended to reduce noise pickup by the interconnecting cable. Integral mounting simplifies the installation and the problems associated with low level mV signals.

Nevertheless, this option is frequently not available due to the possibility of noise pickup from the magnetic coil. If the secondary electronics are separated then an integral pre-amplifier might be able to boost the voltage.

Provided by : www.spic.ir

Copyright American Petroleum Institute

High voltage AC excitation cables and low voltage signal cables should be run separately, preferably in conduit. In older designs a power factor correction might also be needed. In contrast, for DC magnetic flowmeters, the power and signal cables can be run in one conduit. The voltage and frequency excitation of the electromagnets are lower with DC magnetic flowmeters.

6.4.4.2 Up and Downstream Sections

A shaped magnetic field significantly reduces errors that result from nonsymmetrical flow patterns. The magnetic flow meter measures the entire pipe cross section. Consequently, they are among the least meters affected by pipe configurations.

Typically, three pipe diameters upstream and two pipe diameters downstream have been found to be sufficient. However, since the velocity vector is not perpendicular to the cross sectional area magnetic flowmeters are affected by swirl.

Upstream obstructions, such as two elbows out of plane, control valves and non-concentric pipe reducers require longer lengths. Since shaped magnetic fields are used, it is recommended that the supplier's guidelines be followed to obtain the full benefit of the meter selected.

Reducing a pipe in size to match a meter has a nominal effect on accuracy as long as velocity limits are observed. Standard reducers have been installed immediately upstream of the meter with little or no adverse effect. It is recommended that flanged reducing sections with an 8° taper top and bottom be used. A smaller meter with a higher flow improves noise rejection and further increases the system turndown.

6.4.4.3 Grounding

This technology relies on electromagnetic fields, so grounding the meter tube is essential. This is necessary not only for safety reasons but also ensures the meter operation. This is especially important if the conductivity of the liquid is low. Since, the electrodes are a possible ground path excessive ground potentials could damage the meter.

Standard pipe is a low resistance conductor and stray electrical currents are common along its length. These currents result from coupling with transformers, motor windings or medium voltage conductors. They are also caused by deteriorated motor insulation. Due to the effects of these sources a meter installation in areas containing strong magnetic or electrostatic fields is not recommended. In particular, avoid pipe instillations that run parallel to power conductors that operate above 500 volts.

Magnetic meters should be grounded carefully relative to the fluid's potential. This is particularly important for meters with excitation frequencies that are a multiple of the line frequency. Where possible, the meter potential should be identical to the fluid potential. Otherwise, the electrodes could be exposed to common mode voltages that severely limit the accuracy.

The error that this causes depends upon the stray current magnitude and the fluid's conductivity. Bonding of the meter with the adjacent pipe minimizes zero shifts because the bonding prevents stray currents from passing through the meter. The grounding screws on the meter tube should also be connected to ground. The flange bolts should not be used for bonding since rust, corrosion, paint, and other materials can create an insulating barrier.

Plastic and plastic lined pipes should use up and downstream ground rings to prevent currents in the conductive fluid passing through the meter.

6.4.5 Start-Up and Calibration

No special procedures are needed during start-up since the magnetic flow meter is without obstruction, but there are often electrical adjustments that might be required prior to introducing flow. The supplier's instructions should be consulted regarding these procedures.

Provided by : www.spic.ir

Copyright American Petroleum Institute

6.5 Turbine Meters

6.5.1 General

Turbine meters measure volumetric flow using a rotor centered in a fluid stream. Its reading is linear with flow. Turbine meters are used where accuracy and rangeability are needed. Their primary applications are custody transfer, inline blending, truck loading stations, and batch applications, particularly where totalization is needed.

Turbine meters have the following advantages:

a) attainable accuracies are 0.07 % to 0.25 % of actual liquid rate;

b) API grade liquid meter accuracy ≤0.15 % of rate with a repeatability of ≤0.10 %;

c) liquid velocities from 1.4 m/sec to 9.1 m/sec (4.6 ft/sec to 30 ft/sec) with an accuracy of 0.10 %;

d) flow rates available as low as 20 cc/hr (0.0001 GPM);

e) gas accuracy 1.0 % standard and ≤ 0.10 % with linearization;

f) operates with gas densities from 0.80 kg/m^3 to 72 kg/m^3 (0.05 lb/ft^3 to 4.5 lb/ft^3);

g) time response ≤ 10 m/sec for medium size meters;

h) 350:1 turndowns available;

i) multiple pickup coils possible;

j) available to 24 in. NPS;

k) operating temperature between –185 °C and 400 °C (–300 °F and 750 °F);

l) pressure ratings ≥68.9 MPa (10,000 psig);

m) bidirectional measurement possible.

Turbine meters are limited by the following characteristics:

a) maximum kinematic viscosities 30 cSt to 160 cSt;

b) turbulent flow is needed;

c) flow conditioners are usually needed;

d) strainers are necessary;

e) damaged by sub-micron particles;

f) bypass recommended;

g) limited metallurgy;

h) damaged by over speeding or pulsations;

Provided by : www.spic.ir

Copyright American Petroleum Institute

i) bearing and rotor replacement requires factory recalibration;

j) long term accuracy requires a test stand, prover or master meter;

k) piping for meters larger than 2 in. NPS is more complicated.

The signal from a turbine meter is a low level pulse that is produced by a magnetic pickup. Figure 23 shows a pickup positioned above the meter blades as well as the upstream and downstream meter supports. The calibration factor (K) is expressed in pulses per unit volume. The meter rangeability depends on the design, fluid kinematic viscosity, density and size. The K factor is specific to rotor which is determined by calibration for specific kinematic viscosities and flow rates.

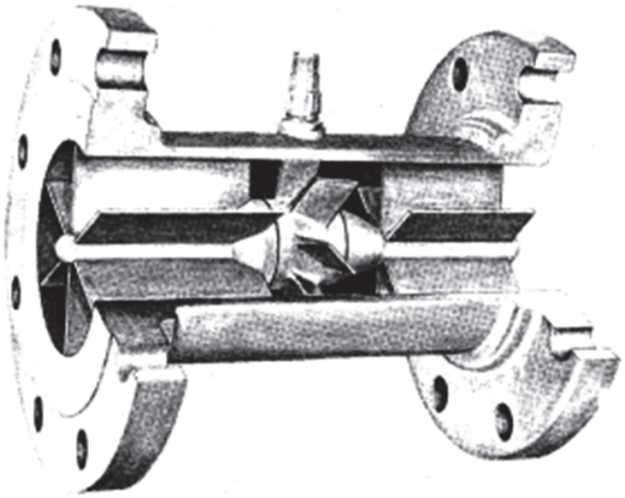

Figure 23—Turbine Meter Cutaway

The fluid density should be considered when selecting a turbine meter since it affects the turndown. The driving torque to overcome rotor drag forces is proportional to the fluid density and fluid velocity squared. So as the fluid density decreases, the driving torque drops, this increases the minimum measureable flow rate.

To ensure an adequate torque, the minimum flow rate should be increased by the following factor:

$$\text{Rate Increasing Factor} = \frac{\text{Calibrated Specific Gravity}}{\text{Product Specific Gravity}}$$

The rate increasing factor should be used as a guide. Turbine meter calibrations are made using Kinematic Viscosity and this term includes a density component. See 6.5.3 concerning the use of turbine meters with fluids that have different properties.

6.5.2 Turbine Meter Backpressure

When measuring liquids with high vapor pressures, such as LPGs, it is important to maintain enough back pressure on the turbine meter to prevent flashing and cavitation. Beside rotor damage the K factor is biased upwards.

API *MPMS* Ch. 5.3-2005 provides the following equation for determining the minimum back pressure:

$$BP = (2 \times \Delta P) + 1.25 \times VP$$

Provided by : www.spic.ir

Copyright American Petroleum Institute

where

BP is the minimum meter pressure (psig);

ΔP is the pressure drop at maximum flow rate (psi);

VP is the liquid vapor pressure (PSIA).

6.5.3 Universal Viscosity Curve

The property that most significantly effects the operation of the turbine meter is kinematic viscosity. A turbine meter should be calibrated at the same kinematic viscosities at which it is operated. It is desirable but not necessary to calibrate a meter at its operating temperature. The temperature effects can be compensated.

The Universal Viscosity Curve (UVC) is a method of presenting meter data over a kinematic viscosity range. Universal Viscosity Calibration consists of a series of calibrations at various kinematic viscosities covering the expected range. Typically, ten points are used per kinematic viscosity. The number of kinematic viscosities needed varies but the rule is that any two consecutive viscosities should not differ by more than a factor of 10. The combined data is presented as K factor versus Frequency/Kinematic Viscosity and within limitations follows a single line.

UVC's primary drawback is that it is mostly limited to the meter's linear range. This means that the meter turndown is 10:1 and perhaps as high as 30:1 within a ±0.5 % uncertainty. Below this range, curve separation begins to occur.

It is possible to express this data as a polynomial equation so the meter can be operated over the calibrated range of kinematic viscosities. However, it is not acceptable to extrapolate this relationship to kinematic viscosities beyond those used for the calibration or below where curve separation has begun.

These calibration techniques apply to gases as well as liquids. It is common practice to ignore the absolute viscosity of gases and use density during gas calibrations but gases densities are also low. Consequently, the kinematic viscosity variations can be high for vapors.

The conditions where the Universal Viscosity Calibration is valid are within the normal meter operating range and for kinematic viscosities less than 100 centistokes. However, the temperature calibration effect is ignored in these plots. The error that results for a typical meter amounts to about 0.14 % per 100 °C (0.3 % per 100 °F).

However, using Roshko Number and Strouhal Number correlation techniques developed by the National Institute of Standards and Technology corrects this error with a thermal expansion (α) term. The Strouhal and the Roshko Numbers are two dimensionless parameters.

$$St = KD_o^3 [1 + 3\alpha(T - T_o)]$$

$$R_o = f(\nu)^{-1} D_o^2 [1 + 2\alpha(T - T_o)]$$

where

K is the meter factor;

D_o is the meter diameter;

α is the material expansion factor;

T is the fluid temperature;

Provided by : www.spic.ir

Copyright American Petroleum Institute

T_o is the expansion factor base temperature;

f is the meter output frequency;

ν is the fluid kinematic viscosity.

The St versus R_o method accounts for the temperature effects on the meter and is based upon the recommendations of SAE ARP4990. If the meter has been calibrated to the correct Roshko Number range (i.e. the correct kinematic viscosity and flow range), then the calibration can be corrected for other operation temperatures. Still, the same limitations apply to the Strouhal vs. Roshko correlation. The meters only follow this correlation within the calibrated range of kinematic viscosities.

6.5.4 Bearings

6.5.4.1 General

The meter bearings need to withstand temperature extremes, over speeding, corrosion, and abrasion as well as pressure, temperature, and flow transients. The meter responds best with low rolling friction. The bearings should also hold the rotor in the correct axial position by overcoming the force that is driving it downstream. To accomplish this journal, ball or pivot bearings are used. Figure 24 shows the three bearing types.

6.5.4.2 Journal Bearings

A radial journal bearing consists of a rotating shaft with a stationary bushing. They can be made from a variety of materials. The shaft floats on a liquid film generated by the rotation. The journal bearing drag limits the rangeability and linearity of the meter. The friction with a journal bearing is higher than a ball bearing's friction but they can operate satisfactorily where ball bearings are unable.

Journal bearings are used with a thrust bearing that is mounted on the downstream support. Since they operate like a journal bearing thrust bearings add to the friction. Some meters use the differential pressure across the rotor to minimize the load but thrust balancing alone does not provide enough counter force for operating across wide kinematic viscosity changes and flow rates.

Tungsten carbide is one of the better bearing materials and is suitable with fluids containing some abrasives. It works with water and non-oxidizing acids. It has superior wear resistance and when applied correctly almost never breaks down. Tungsten carbide can be used up to 650 °C (1200 °F).

CoCr-A and aluminum oxide ceramic have similar properties for abrasive fluids. They are resistant to some fluids that tungsten carbide is not. Aluminum oxide is resistant to most acids especially oxidizing acids. Still, neither has the endurance of tungsten carbide.

Journal bearings normally are not suitable for gas services. Gas lacks the viscosity to generate a film to float the rotor shaft. One exception is using graphite sleeves with a metal journal. Bonded graphite is used as a sleeve material in conjunction with the metal journal. Graphite has sufficient lubricity for steam and air measurement.

Bonded graphite takes less effort to fabricate than ceramics but it is not suitable for abrasive fluids. Still, graphite is compatible with a wide variety of fluids and can be used with journal materials (e.g. UNS N10276) to provide corrosion resistant bearings. It is often used with a Type 304 Stainless Steel shaft in water service. Depending on the binder material, graphite is limited to a maximum temperature of 540 °C (1000 °F).

Provided by : www.spic.ir

Copyright American Petroleum Institute

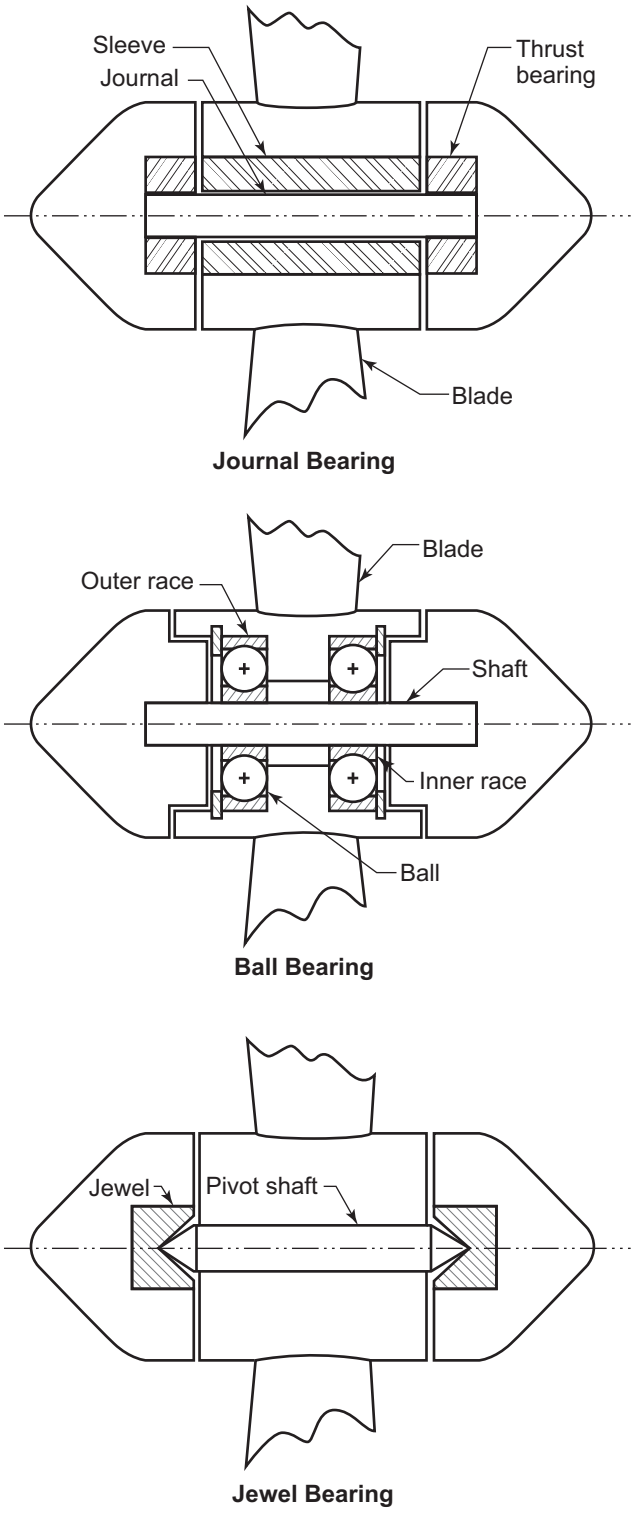

Figure 24—Turbine Meter Bearing Types

Provided by : www.spic.ir

Copyright American Petroleum Institute

6.5.4.3 Ball Bearings

Ball bearings offer sturdy, low drag operation. Ball bearings take both the radial and axial loads. They have wide rangeability and excellent linearity. Bearing replacement has little effect on performance, so they can installed without recalibration.

The liquid provides the bearing lubrication. Ball bearings provide acceptable service with fuels, most oils, alcohol, refrigerants, and cryogenic liquids. They are not suited for oil containing hydrogen sulfides. When used at cryogenic temperatures, it is necessary to use a bearing, shaft, and rotor material that has similar thermal expansion coefficients to prevent binding or loosening.

The most common bearings employ Type 440C Stainless Steel for their balls and races. Type 440C Stainless Steel is not suitable for service with water or acids. Standard 440C Stainless Steel bearings can be used up to 230 °C (450 °F). With high temperature heat treating they can be used to about 400 °C (750 °F). Some designs have impregnated coatings (e.g. molybdenum or tungsten disulfide) to provide lubricity at elevated temperatures.

Hybrid ceramic ball bearings have Type 440C Stainless Steel races and silicon nitride balls. They are suitable for water, cryogenic, and other applications that do not have lubricating properties.

Self-lubricating ceramic bearings are also available. These bearings are wear resistance and are less susceptible to particulates. Ceramic bearings are reportedly more resistant to sub-micron particles. Ceramic ball bearings also have a low coefficient of friction. Self-lubricating ceramic ball bearings are designed to tolerate cool down in cryogenic applications. They are also used in high temperature applications to 425 °C (800 °F).

Gas provides minimal lubricity so either lubricated sealed bearings or bearings specifically intended for gas service should be used. Ball bearings operate best with clean, non-corrosive gases: e.g. natural gas, air, argon, helium, hydrogen, oxygen, ammonia, and nitrogen.

6.5.4.4 Pivot Bearings

Pivot bearings consist of a tapered shaft spinning in two conical supports. Pivot bearings support both the radial and axial loads. Both the shaft and supports are made from hard materials; e.g. tungsten carbide or a sapphire jewel. The friction generated by a pivot bearing is considerably less than the friction created by ball bearing, but its load carrying capacity is less as well.

The materials used with pivot bearings are impervious to most chemical attack. Because of the material hardness, they are not subject to abrasion from particulate contamination. Pivot bearings are used at low densities and low flow rates. They are used in insertion meters and are suitable for small turbine meters.

Pivot bearings have high stresses and chipping occurs with large loads. They should not be used where high levels of shock and vibration occur and they should not operate at high speeds. Rotors over 1 inch in diameter usually generate radial and axial loads that are too high for their use but in low flow gas applications they are used in meter sizes up to 2 in.

6.5.5 Pickups

6.5.5.1 General

Though mechanical gear trains are available in refinery services, electromagnetic pickups are usually supplied with turbine meters. They are threaded into an austenitic stainless steel body or a coupling welded on the body. The gap between the blade and the pickup is 1.5 mm to 8 mm (0.050 in. to 0.300 in.).

There are three basic types: magnetic inductive, magnetic reluctance, and modulated carrier frequency. Because the drag is different with each probe, they are not interchangeable. Recalibration is necessary when changing pickup types.

Provided by : www.spic.ir

Copyright American Petroleum Institute

Pickups generate an alternating voltage that is equal to the blade passing frequency. The resolution provided by a blade-type rotor can be improved by the use of a rimmed or shrouded rotor. This construction is usually standard for meters of ≥8 in. NPS.

Two pickoffs oriented 90° electrically out of phase or quadrature increase the resolution but have twice the drag. The two pickups also provided redundancy. They also allow the determination of flow direction and provide diagnostic information.

Except for modulated carrier frequency pickups, the magnetic field from the pickup exerts a drag on the rotor. At the low flows this force is sufficient to affect the linearity of the meter and eventually stops the rotor.

6.5.5.2 Magnetic Reluctance Pickup

The magnetic reluctance pickup is the most common. The magnetic reluctance pickup contains a magnet that is attached to an iron bobbin with a coil wrapped around it. A magnetic material is not necessary for the blades but they need adequate magnetic permeability or ferromagnetic properties for the pickup to sense them. Typically, 400 series stainless steel blades are used.

The magnetic reluctance drag severely influences small meters in gas service. Low drag magnetic pickups with reduced magnetism can be used but this reduces sensitivity. To minimize drag carrier frequency pickups are recommended for gas applications for meters two inches and smaller or for extended range liquid meters.

The voltage output is a sine wave. The amplitude is a function of the frequency. At the lowest frequency the voltage can be only a few millivolts, typically, about 10 mV. It increases as the frequency of the meter increases to a peak of a few hundred millivolts. In some case this can be as much as 5 volts.

Any instrument capable of measuring a low voltage sine wave can be used to measure the frequency. Shielded wires are needed to eliminate spurious counts. Amplification is normally not needed if the signal is transmitted a short distance, about 6 m (20 ft). Shorter distance limitations apply with lower frequencies and amplitudes.

6.5.5.3 Magnetic Inductive Pickup

Inductive pickups are occasional used with turbine meters. The inductive pickup requires imbedded magnets in the turbine rotor or rotor hub. This offers less drag but complicates the rotor fabrication. A pickup coil with an iron core bobbin produces electric pulses with the passage of the magnets. The signal produced is a sine wave and has the same signal characteristics as a magnetic reluctance pickup.

6.5.5.4 Modulated Carrier Pickup

The modulated carrier frequency, eddy current, or active pickup contains a ferrite core with a coil around it. These pickups are used in conjunction with an amplifier. External power, usually 24 VDC, in the form of a third wire is needed.

The pickup uses a high frequency carrier, usually 40 kHz to 50 kHz, which is modulated by the passing turbine rotor blades. The carrier frequency is filtered out by the amplifier leaving the blade passing frequency. Since the resulting signal is produced by an amplifier, the output is transformed into a square wave pulse with constant amplitude, usually 5 or 10 volts peak-to-peak, which can be transmitted long distances or fed directly into an analog signal converter.

Negligible drag is imposed so rotation can be sensed without influencing the rotor’s ability to follow the flow rate. The performance of the meter at low flow rates or with low density fluids is significantly enhanced. The rotor is a magnetically permeable material but the choices are wider due to the better sensitivity of the pickup.

A high temperature carrier pickup with separate electronics and a tuned cable can be used with temperatures up to 232 °C (450 °F). Cryogenic versions are also available.

Provided by : www.spic.ir

Copyright American Petroleum Institute

6.5.5.5 Output Electronics

The turbine meter's low level pulse makes it susceptible to noise. For transmission over longer distances, amplifiers are used to transform the low level sin wave into a TTL signal or a 5 or a 10 volt peak-to-peak square wave signal. This improves the signal to noise ratio in electrically noisy environments. The amplifiers often have an open collector option for use with powered inputs.

Frequency-to-analog devices are used to convert the frequency signal into a 4 to 20 mA flow rate signal. Linearizers compensate for non-linearity in the meter and produce an output signal over a wider flow range are also used. Further, metering electronics can perform signature analysis which can detect bent blades, bearing wear, cavitation, and obstructions.

To enable the use of lower frequency inputs fixed factor scaling modules can be used to reduce the signal frequency. Flow computers can take into account changes in meter performance with changing fluid properties. Local flow rate indication and total accumulated flow are also common options.

6.5.6 Installation

6.5.6.1 General

Turbine meters are normally installed in horizontal lines but can be in the vertical as well. The orientation should be provided to obtain the correct calibration.

6.5.6.2 Pipe Layout

Turbine meters accuracy depends on being installed according to API *MPMS* Ch. 5.3-2005. The line should be reasonably free from vibration. Additionally, straightening vanes or proprietary flow conditioners are needed for maximum accuracy. Turbine meters should have an upstream strainer to prevent rotor and bearing damage. Mesh sizes range from 10 microns (μm) to 100 microns (μm) depending on size, fluid phase, and bearing type.

6.5.6.3 Wiring

Physical isolation of the wiring reduces cross talk with other signals and power lines. The pre-amplifier electronics should be installed in a metal enclosure. Running the cable in steel conduit is recommended as well. The enclosure should be properly grounded. A ground wire is recommended from the local power supply common to the enclosure.

The cable entry requires full grounding. For modulated carrier pickups a twisted pair with full braid cable and a cable fitting that provides a metal to metal clamp type connection should be supplied. With high frequency cable grounding both sides of the shields is recommended. The cable's insulation should be stripped. The exposed areas should be covered with EMC foil tape to allow for the cable fitting to clamp onto the braided shield with exposed areas covered by foil tape.

6.5.7 Meter Start-Up and Operation

Turbine meters are easily damaged during start-up. The following guidelines are recommended.

a) The meter and air eliminator should be installed after final flushing.

b) The system should be vented slowly to prevent over spinning.

c) To prevent hydraulic shock, fluid flow should start slowly.

See API *MPMS* Ch. 5.3 and ISO 2715 for liquids and ISO 9951 for gas for more information on the installation and application of turbine meters.

Provided by : www.spic.ir

Copyright American Petroleum Institute

6.6 Positive Displacement Meters

6.6.1 General

Positive displacement meters are volumetric meters. The fluid can be either liquid or gas. Shaft rotation is created by trapping and releasing successive fluid pockets. A gear train that drives a local totalizer converts the shaft rotation into standard volumetric units. Pulse generators provide a discrete output for remote indication. Mechanical temperature compensators are available to adjust the reading.

Positive displacement meters have the following advantages:

a) attainable accuracies are 0.05 % to 0.15 % of flow;

b) repeatability is between 0.02 % to 0.05 %;

c) rangeability is 10:1 or better;

d) does not require an upstream meter run;

e) independent of external power;

f) works well with high viscosity fluids;

g) local temperature correction is possible.

Positive displacement meters have the following disadvantages:

a) requires meter proving;

b) difficult to install and startup;

c) source of mechanical vibration and pulsation;

d) rate indication needs additional instrumentation;

e) normal wear continuously lowers accuracy;

f) parts are not interchangeable;

g) loses accuracy with lighter fluids;

h) requires filters or strainers;

i) large sizes require structural foundations;

j) limited metallurgy;

k) limited pressure and temperature capabilities;

l) high maintenance effort needed.

For refinery or petrochemical processes positive displacement meters are mostly legacy devices. There are a few services (e.g. potable water) that call for their use. However, they remain in use at truck terminals, jetties, and pipelines. See API *MPMS* Ch. 5.2 and API *MPMS* Ch. 5.4 for further information on positive displacement meters.

Provided by : www.spic.ir

Copyright American Petroleum Institute

6.6.2 Installation

Most positive displacement meters are installed in horizontal lines. The meter should be installed so that the body is not subject to pipe strain. The pressure drop across the meter should not cause cavitation or flashing.

Positive displacement meters should be installed with strainers to prevent debris from damaging them. The mesh size should be according to supplier's recommendations. A bypass around the meter and strainer is recommended with access provided for their total removal.

The pipe should be arranged so that the meter is kept liquid full. Where the installation does not allow this, air eliminators can be added. However, these devices can leak and release vapors so venting to a storage tank or carbon canister is necessary. Lastly, custody transfer installations should be designed to allow proving. See 6.5.7 for startup recommendations.

6.7 Vortex Meters

6.7.1 General

Vortex meters are less sensitivity to wear and flow variations than orifice plates. Vortex meters are used in applications that require rangeability and accuracy. Vortex meters are installed inline and they can be placed in any orientation. For meters smaller than 4 in. NPS the installations are economical and are often usable with Reynolds numbers less than 20,000. Also redundant sensors are a common option with vortex meters.

A vortex meter uses a bluff body placed in a liquid or gas stream to generate a vortex train. The frequency of this vortex is based upon its characteristic Strouhal Number. A train of alternating pressure is measured by sensors in the body. The frequency of the changes is linear to the velocity of the fluid stream. Since flow in a pipe is a function of cross sectional area and velocity, a direct relationship exists between frequency and flow rate.

It has been shown that the Strouhal Number is unaffected by wear and minor damage to the bluff body. Different methods are used to sense the vortices and some designs are more robust and clog resistant than others. With some designs the sensor can be replaced while the line is under pressure and flowing. Otherwise, in services where slug flow or high temperatures can occur damaged, block and bypass valves might be considered when conditions do not permit a shutdown. Redundant designs also increase reliability. Regardless, in operation a properly selected and installed vortex meter has been found to require almost no maintenance.

Vortex meters have the following advantages:

a) wide rangeability for Reynolds Numbers above 10,000;

b) unaffected by Reynolds Number once turbulent flow is established;

c) for liquids an accuracy of 0.5 % to 0.75 % of rate;

d) for gas an accuracy of 1.0 % to 1.5 % of rate;

e) measurement essentially drift free;

f) fully redundant versions available;

g) simple calibration and low maintenance effort;

h) meter are available with integral reducers;

i) operates between –195 °C and 425 °C (–320 °F and 800 °F);

Provided by : www.spic.ir

Copyright American Petroleum Institute

j) available in sizes up to 16 in. NPS;

k) solids and wear resistant;

l) linear measurement;

m) true volumetric pulse output.

Vortex meters have the following limitations:

a) limited metallurgy is available;

b) loss of measurement with laminar flow;

c) high pressure drop is needed for best turndowns;

d) has over range limitations;

e) some designs clog and require strainers;

f) can be affected by pulsating flow.

6.7.2 Selection and Sizing

Vortex shedding flowmeters installations should comply with ASME MFC-6M-1998 requirements. The following should be considered in vortex flow meter selection:

— turndown requirements across the operating conditions;

— Reynolds number preferably should be above 20,000 during normal conditions;

— the upper and lower fluid velocity and density velocity squared ($\rho \times V^2$) terms are met at either end of the range;

— cavitation does not occur in liquid service during normal operation.

Vortex meters for refinery services should have the following features:

— a vortex generating and shedding element that spans the pipe;

— flanged process connections;

— a two wire electronic signal transmitter;

— the output signal should cutoff and go to zero at the minimum measurable flow rate;

— the meter should have no process passages between the sensor and the shedder bar.

Over sizing increases the low flow cut off point, which could make the meter unsuitable for control. Transitional flow, which is a mixture of laminar and turbulent flow, creates instability by periodically dropping the signal when the fluid is in the laminar mode.

Provided by : www.spic.ir

--`,,,`````,`,`,```,,`,`````,-`-`,,`,`,`,,`---

Copyright American Petroleum Institute

The flow upper range value should be ≥65 % of the upper range limit of the meter. The settings for low flow functions should amply exceed the cutoff point.

Selection of the cutoff point is critical for meters used in closed control loops since the signal appears and then disappears as the valve opens and closes. If operation in the cut off region cannot be prevented, the use of a “flow estimator” based on the control valve position and available pressure readings should be considered.

To ensure operation at minimum flow (e.g. during startup) the meter should be sized for these conditions. This generally results in a meter that is one or two sizes smaller than the line size. Pressure drops of 34 kPa to 48 kPa (5 psi to 7 psi) are not unacceptable. If two sizes of vortex flowmeters are both able to cover the minimum and maximum flow rate, the smaller size meter should be selected.

Vortex meters are available in discrete pipe sizes with fixed top end flow rates for liquids between 7.6 m/sec and 9.1 m/sec (25 ft/sec and 30 ft/sec). Dropping a line size to minimize the cutoff point can result in the meter maximum reading being greater than 70 % when the process line is sized near the allowed maximum the sizing criteria of 3.1 m/sec (10 ft/sec).

With the correct sensor, vortex meters are used with liquids having a moderate amount of granular particles but they are not appropriate for combined liquid/vapor streams. Further, in liquid applications, the pressure profile across the vortex meter should not result in cavitation during the expected operating conditions. Cavitation causes signal dropout and damages the meter as well as the downstream pipe.

6.7.3 Vortex Meter Lock-In

Vortex meters can be affected by pulsating flow. When line pulsation frequency (f_p) approaches the vortex shedding frequency (f_v) there is a tendency for the vortex shedding cycle to lock-in to the pulsation cycle at the same ($f_v = f_p$) as well as half the pulsation frequency ($f_v = {}^1/_2\, f_p$).

During locking-in the flowmeter ceases to be a reliable flow indicator. Errors in the indicated flow rate can be as high as ±80 %.

The range which the vortex shedding frequency locks-in to a flow pulsation depends on the amplitude of the pulsation, the bluff body shape and the blockage ratio; i.e. bluff body width to pipe diameter. The shapes associated with the widest locking-in are the same as those used with commercial vortex meters to obtain the strongest and most regular vortices.

The locking-in flow range increases as the blockage ratio approaches the values used with vortex meters. When the pulsation frequency is higher than the vortex shedding frequency there is no obvious locking-in but Strouhal number shifts can approach ±10 %.

Vortex meters should not be located downstream of positive displacement pumps or compressors without suction and discharge dampers. Pulsation sources should be less than 25 % of the lowest meter shedding frequency. Since the shedding frequency is inversely proportional to the bluff body width, it is possible to use a vortex flowmeter (e.g. insert type meter) that has a lower blockage ratio to raise the shedding frequency.

6.7.4 Installation

The meter upstream and downstream run lengths for vortex meters are similar to those for orifice plates. However, each design responds differently to the effects of swirls, etc. so the requirements specific to that design should be followed. Flow conditioners also are effective with vortex meters.

Since thermowells also produce vortices it is important they be installed downstream of the vortex meters.

Provided by : www.spic.ir

Copyright American Petroleum Institute

Upstream pipe or flange transitions should be smooth and flush with the pipe wall, i.e. free from roughness and burrs. Gaskets should not protrude into the flow stream when flanged meters are installed. Otherwise, vortices could be created which adversely affect the performance of the meter.

The electronics should be mounted remotely for high temperature applications and the sensor head should be mounted at a 45° angle and preferably in the horizontal position to avoid heating from thermal convection by the process.

If mounted in horizontal pipes with slurries or a solids potential, it is recommended that meter be mounted with the shedder bar in the horizontal plane to prevent the buildup of particles and debris. If necessary the bar can be mounted at a 45° angle minimize spacing in pipe racks.

For gas measurements in horizontal lines, the meter should not be located at low points where condensate could impact the measuring element. For steam services or where gases can condense drain valves should to be provided to prevent shedder bar damage from liquid slugs during startup.

6.7.5 Start-Up and Calibration

The line should be flushed and hydrostatically tested before the meter is installed. Vortex meters are sometimes damaged during start-up of new facilities from debris. Field calibration of vortex meters is limited to electrically spanning the transmitter or adjusting the pulse scaling factor.

6.8 Ultrasonic Flow Meters

6.8.1 General

Ultrasonic flow meters are volumetric meters and are used with liquids, gas, and steam. Accuracy is based upon their nominal flow range. The meters normally operate on seven to twenty watts of external power, but two wire loop powered versions are available. They have the following advantages:

a) minimal flow obstruction so there is no pressure drop;

b) high temperature and pressure limits;

c) wear resistant and dimensionally stable;

d) multi-path designs suitable for custody transfer;

e) gas density measurement possible;

f) swirl resistant designs available;

g) dimensionally less sensitive than head meters;

h) suitable for bi-directional flow measurement;

i) resistance to solids build up and plugging;

j) operates over a wide range;

k) online installation possible;

l) virtually drift free operation.

Provided by : www.spic.ir

Copyright American Petroleum Institute

6.8.2 Selection

The following services should be considered for use with ultrasonic flow meters:

a) large lines;

b) large turndowns;

c) high temperatures;

d) pulsating flow;

e) minimum pressure;

f) erosive services;

g) cryogenic liquids.

6.8.3 Operating Conditions

There are circumstances that limit the amount of acoustic energy that can be transmitted. Low pressure gases with high hydrogen content are difficult to measure in large pipe. In these circumstances internal sensors might be needed. The piping configuration and accuracy requirements affect the number and orientation of the transducers. See BS 7965 for more information on the application of ultrasonic flow meters.

The maximum allowable viscosity is based on a minimum Reynolds number or receiving a minimum signal. A viscosity limit of 200 cSt is a typical maximum for ultrasonic flow meters but some devices can operate at 1000 cSt.

6.8.4 Doppler Flow Meters

The Doppler flow meter is used with heavy slurries (e.g. sewage) and vapor-liquid flows. To operate a Doppler flow meter requires a liquid that contains a minimum of 100 PPM of suspended solids, or bubbles 100 microns (µm) or larger. Doppler meters have limited application in petrochemical facilities where fluids are typically solids free.

6.8.5 Time-of-Flight Flow Meters

The time-of-flight method is preferred for refinery services. Time-of-flight ultrasonic meters are based on transit time. These meters give accurate results and are reliable.

They measure the time difference or frequency shift between two acoustic signals. One is measured with the flow and the other is against the flow. In operation the flow adds velocity to the acoustic signal in the flow direction causing the frequency to shorten and subtracts velocity from the acoustic signal in the opposite direction increasing the frequency. By using appropriate correlations and filtering an output is produced that is proportional to the volumetric flow rate.

Since time of flight meters rely on measuring the difference between two acoustic signals, the errors caused by speed of sound variations is negligible.

The best approach creates a meter path that is long enough to produce the maximum time difference for rangeability but not long enough to lose the signal in the noise. The longer the path is the better the sensitivity. Path lengths can be increased by bouncing the signal off the inside pipe wall.

Since vapor bubbles attenuate the signal, there is limit to their size and concentration in liquids. Solids on the other hand have a lot less impact on the acoustic energy of the signal. Some ultrasonic meters are able to use both Doppler and Time-of-Flight methods and are able to automatically switch between them.

Provided by : www.spic.ir

Copyright American Petroleum Institute

6.8.6 Sound Velocity

The sound velocity can be used to determine the flowing density of gas. The molecular weight or density of gases can be determined if the pressure, temperature, specific heat ratio, and compressibility are known. The density output is used commonly for mass flow and heating value in flare stacks and furnaces fuel gas supplies.

For liquids the relative concentration of two components can be determined. Also, though not accurate for multi component liquids, it can serve as a tell-tale variable. It can provide a useful trend that is indicative about the process.

6.8.7 Reliability

The ultrasonic meter linearity is unaffected by usage, so little maintenance is required. Due to the use of timing or frequency measurement circuits that are based upon communication technology there is little drift. The uncertainty in time measurement is in the nanosecond range. Being out of the flow path they are not subject to erosion so they are dimensionally stable. Since they have no moving parts they are not subject to wear.

Since they are based upon differential measurements, they are resistant to coatings, provided enough acoustic energy exists. Cavities are normally kept clean by flow eddies. In extreme situations, small flush-mounted spray fittings can be used to flush transducer cavities when needed.

The probes are precisely aligned towards each other so bending of the ultrasonic probes or torque acting on the probes affects their accuracy.

6.8.8 Noise Rejection and Diagnostics

The ultrasonic flow meters are provided with noise rejection algorithms to prevent interference from noise source; e.g. severe service valves, pump cavitation, or vessel aeration. Signal signatures are applied to the transmitted signal to eliminate incorrect readings. The shape of received pulses is checked and pulses that do not fulfill the necessary criteria are rejected.

Still, enough noise can mask the acoustic signal. In many situations this can be corrected by changing the frequency of the acoustic signal. If an ultrasonic meter is installed near a valve that operates above the critical pressure ratio or has anti-cavitation trim, extreme noise across a wide spectrum could occur, so the following might be necessary:

a) installing the meter upstream of the valve;

b) placing tees between the control valve and meter;

c) installing the control valve and the meter as far apart as possible.

More than twice the noise attenuation occurs when the meter outlet comes into the side of a pipe tee than using an elbow. The dead leg in the tee reflects the sound to create a phased shifted wave pattern that cancels the incoming noise.

Ultrasonic meters have a wide variety of diagnostics. Some of the diagnostic indications include:

a) pulses are outside of their expected flight times;

b) the percentage of rejected pulses is excessive;

c) the automatically gain value exceeds expected limits;

d) the background noise has changed;

e) time difference between the paths is unacceptable.

Provided by : www.spic.ir

Copyright American Petroleum Institute

Since the measurement is instantaneous, there is a large degree of data scatter when compared to other slower flow meters. To manage the data scatter, measurement rates between 10 Hz to 30 Hz are used. Algorithms are then applied to provide a time averaged signal that accurately reflects the flowing conditions. On the other hand, pulsation flow is not a problem because of the fast sample rate. At a 30 Hz sample, rate pulsation frequencies of 15 Hz can be measured effectively.

6.8.9 Single Path versus Multi-Path Meters

Ultrasonic meters are velocity profile dependent. Single beam ultrasonic meters are particularly vulnerable to velocity profile changes. Single beam meters mounted at the center of the pipe can only provide an accurate measurement if the Reynolds number and the pipe roughness are known plus there is a symmetrical flow profile.

Multi-path meters are less sensitive to velocity profile variations. Two path meters have their sensors placed half way between the center of the pipe and its wall. This location is more immune to flow profile effects.

Multi-path flowmeters should be considered if better accuracy is needed or if the straight run length cannot be met. Multi-path meters allow the use of anti-swirl correction techniques. Generally, the more paths provided the less straight run needed. The number of paths is increased by adding sensors or by reflecting the sound off the sides of the pipe.

Multi-path meters should be considered for applications with low Reynolds numbers or laminar flow as well as where solids or vapors could be present.

6.8.10 Insert Transducers

Since they do not have pipe wall transmission losses, insert type systems provide greater acoustic power than clamp-on or non-contact transducers. They also offer a better signal-to-noise ratio since they avoid the sensor produced noise from the reflections between the inner and outer pipe boundaries that affect non-contact transducers.

Insert type systems can be of three types: wetted transducers, those installed in a protective pocket and sensors attached to a wetted wave guide.

Wetted probes can be provided with retraction mechanisms and valves to allow element replacement but other than use with a hot tap installation this is unacceptably cumbersome. Sensors that use pockets or wave guides are usually more effective for online sensor replacement.

The non-intrusive type sensor installation is preferred. The sensors are recessed in a nozzle which protects them and there are fewer flow disturbances. The use of nozzle inserts to create a flush surface is not recommended since it results in beam refraction.

6.8.11 Non-Contact Transducers

Non-contact ultrasonic flow meters can be used for liquid and gas metering. Since a limited amount of acoustic energy is transmitter through the gas a minimum pressure of 200 kPa (30 psig) is applicable. Lowering the pipe wall density by using PVC, aluminum, or titanium proportionally reduces the acoustic impedance and increases the meter's sensitivity. Respectively, these materials have 18 %, 30 %, and 56 % the density of steel. In the case of PVC pipe near and sub atmospheric pressure can be read.

Non-contact transducers installation is uncomplicated and is done without a shutdown. Portable non-contact flow meters are useful for process evaluations and other temporary measurements.

Since the pipe inner wall is un-penetrated, there is no flow disturbance. Non-contact transducers are employed in erosive services. They are also recommended for toxic services since they are completely external to the process.

Provided by : www.spic.ir

Copyright American Petroleum Institute

Metering on existing pipe can be inaccurate if the inner pipe wall has deposits or scale. Non-contact ultrasonic flow meters are suitable for use on metal pipe and glass lined pipes. They are not usable with PTFE or rubber lined pipe. Also use with refractory and concrete lined pipe is not recommended.

Since the sensor pair is tangentially mounted to the pipe, only a path along the diametrical line or the diameter can be measured. Fully developed turbulent flow is required for an accurate measurement. For asymmetrical axial flow, more than one sensor pair can be installed to measure flow in other planes as well as help reduce the errors from swirl. Also, online Reynolds number correction for the flow profile is recommended based upon the Reichardt flow distribution equation or a similar algorithm.

With the standard shear wave transducer, non-contact applications need to be evaluated to ensure that the range, liquid, and mechanical conditions can be handled. Non-contact meters are influenced by variations in the liquid and pipe that change the angle of the acoustic signal. The ultrasonic beam is refracted by the sensor pipe boundary as well as the liquid pipe boundary.

A change in sonic velocity changes the refraction angle. Large changes in the sonic velocity could cause the beam to miss the opposing transducer. Wide beams help overcome refraction and work better with changing liquid density.

Another technology is Lamb or plate wave propagation, where the acoustic beam remains coherent as it travels the length of the pipe wall. This method has the advantage that a wider range of sound velocities can be measured without re-positioning the transducers. However, the transducer frequency and wedge angle should be matched to the pipe wall thickness and acoustic properties to establish the correct propagation.

BS 8452, *Use of Clamp-On (Externally Mounted) Ultrasonic Flow-Metering Techniques for Fluid Applications*, provides extensive guidance for the application of non-contract ultrasonic flow meters.

6.8.12 Meter Assemblies

Most insert type ultrasonic meters are provided as a complete assembly, especially multi-path chordal meters or meters that use pipe reflections to increase the path count. The transducers are mounted at an angle to the flow in the pipe and misalignment affects the system. If the sensors are not axially aligned, energy is lost causing signal attention. Also, when meters are used for custody transfer, precise pipe interior dimensions might be necessary.

Insert type ultrasonic meters have limited metallurgy. Using pockets or wave guide meters that require special alloys are fabricated from pipe using loose components. It is recommended that a fabricated spool from the supplier or an experienced meter skid fabricator be used. This ensures that the sensors are aligned accurately. If the meter is not being flow calibrated, the interior diameter and roughness can be precisely measured according to API *MPMS* Ch. 14.3.2 standards to enable an accurate determination of the cross section. The distance between the transducers is calculated from the speed of sound with a known fluid such as air.

The electronics can be integral with the meter or mounted a short distance from it. For instance, a high temperature application or a pipe rack mounted meter could require remote electronics. Since high frequency signals are used, vendor provided tuned coaxial cable should be used. Otherwise, signal energy could be lost.

6.8.13 Installation

Manufacturers specify the minimum distance that the meter should be from valves, tees, elbows, pumps, and the like. Particular attention should be paid to the possibility of flow swirl in the line.

The meter run requirements for single path meters are similar to those for orifice plates. For multi-path meters with four measurement cords typically require between ten and twenty diameters upstream and five diameters downstream for a meter run. Multi-path meters with anti-swirl flow paths can operate with less straight run, but this can be at the expense of some accuracy.

Provided by : www.spic.ir

Copyright American Petroleum Institute

The insert type meters should be located on horizontal pipe with the nozzles in the horizontal plane to avoid the collection of debris, liquids, or bubbles. Otherwise, exposed sensors that could produce turbulence might be necessary. Liquid meters should not be mounted at high points that can trap vapors. Gas meters should be located on a section of free draining pipe.

If a non-contact ultrasonic flow meter is used, it should be firmly mounted to protect against sensor shifting. If the pipe internal diameter is not accurately known, it has to be surveyed with an ultrasonic thickness gauge or estimated. When possible, to ensure alignment, a rigid sensor construction with both transducers mounted on a common rail should be used.

Non-contact meters can be used with vertical pipe. On horizontal pipe they should be located in the horizontal plane away from high points. The pipe surface should be polished and the blemishes filled in prior to installation. An acoustic coupling compound should be used that is suitable for the pipe surface temperature.

See ASME MFC-5.3-2013 for information concerning ultrasonic meter application.

6.9 Coriolis Flow Meter

6.9.1 General

Coriolis mass flowmeters directly measure mass flow. Fluid flowing through looped vibrating tubes produces a Coriolis force. The deflection of tubes caused by the Coriolis or twisting force is related to mass flow. This measurement provides an accurate and stable reading. An accurate density measurement is also provided by measuring the harmonic frequency of the tubes.

Most Coriolis meters needed a separate power source of 7 watts to 20 watts. However, meters ≤ 3 in. NPS are available as two wire 4-20 mA devices. An alternate form of two wire operation uses an ISA mA type signal, but it uses a milliamp zero value that is elevated beyond the standard 4 mA. By increasing the signal zero, enough energy is provided to operate meters as large as 6 in. NPS.

The Coriolis meter is used with liquids, including liquids with a limited amount of entrained gas as well as slurries. When entrained gas is present a high performance flow conditioner is recommended to ensure a homogeneous mixture.

Also with adequate density, Coriolis meters can measure dry gas and superheated steam. Typically, pressures above 414 kPa (60 psig) are measured. Nevertheless, lower pressure gas can be measured but the interaction of accuracy, permanent pressure loss, and rangeability needs to be balanced.

Coriolis meters are used for the following applications:

— mass flow is needed;

— viscous liquids;

— density measurements are desired;

— low flow is needed;

— meter runs are unavailable;

— accuracy is necessary;

— high turndown is desired.

Provided by : www.spic.ir

--`,,,`````,`,`,```,,`,`````,-`-`,,`,`,`,`---

Copyright American Petroleum Institute

Besides being used for process measurements, Coriolis meters are used for fiscal and custody transfer services. These meters are not affected by velocity profile distortion so they do not require metering runs. See ISO 10790, API *MPMS* Ch. 5.6, AGA-11, and ASME MFC-11 for additional information on Coriolis meters as custody transfer devices.

Changes in the reading at higher pressures are mostly insignificant. However, for applications where maximum accuracy is needed it is possible to compensate the measurement. This can be accomplished by using a meter with this capability or applying a pressure correction factor to the reading.

Coriolis meters are effective for refinery gas to fire heaters. Excluding the hydrogen content, the heating value of the gas is proportional to its mass. Further, the hydrogen content can be estimated using a simple thermal conductivity instrument.

6.9.2 Selection and Sizing

Coriolis meters should not be sized for a minimum pressure drop. Pressure drops of 34 kPa to 48 kPa (5 psi to 7 psi) are not unacceptable. If two sizes of Coriolis flowmeters are both able to cover the minimum and maximum flow rate, the smaller size meter should be selected. Otherwise, uncertainty is increased at the lower readings.

Since the pressure loss can be substantially higher than other metering elements, care should be taken to ensure that cavitation and flashing does not occur. During the sizing process, the cavitation or flashing pressure should be calculated.

6.9.3 Material Selection

Erosion, corrosion, and coatings can cause measurement errors and, over the longer term, sensor failure. Erosion can render a Coriolis meter unusable. Care should be taken to ensure that erosion does not take place inside the sensor while measuring abrasive products. The sensor maximum flow velocity requirements should be observed. Thinning from erosion can eventually lead to tube failure.

Material incompatibility is the most common source of Coriolis tube failure. Corrosion and galvanic effects should be evaluated over the entire operating range including no-flow and empty pipe conditions. Standard material guides do not usually cover thin walled, vibrating tubes. The manufacturer’s experience should be used as well as standard material guidelines. For instance, stainless steel metering tubes should not be used for fluids containing halogens; the vibration of the tube induces stress corrosion. In this situation UNS N10276 should be used.

It is a common perception that since Coriolis meters use thin walled, vibrating tubes, they are vulnerable to stress fatigue. Instead, years of experience has shown that the stress induced is too small to cause fatigue. Still, this perception has led to over specification and in some circumstances rejection of their use.

6.9.4 Meter Housings and Sensor Integrity

It is recommended that the meters should be provided with a secondary containment enclosure suitable for the line pressure. According to ISO 10790-1999, “The secondary containment of a Coriolis meter will only be subjected to pressure under abnormal conditions (tube fracture), which would, from necessity, be for a limited duration and a single occurrence. On this basis, it may be possible to accept a pressure specification for the containment vessel of the Coriolis meter which is less rigorous than that of the rest of the pipework. Such compromises should only be made within design and/or test code requirements.” This is understood to mean for effective pressure protection the case burst pressure needs to exceed the operating pressure to provide the required pressure protection.

A less desirable alternative uses a safety over pressure device to protect the sensor enclosure. A consequence is that the process fluid could be released.

Provided by : www.spic.ir

--`,,```,,,`,,,`,`,`,,`,`,,`,`,,`---

Copyright American Petroleum Institute

The interior of the enclosure should have a connection for checking for tube leakage. Safety can be enhanced by installing a pressure alarm on the case. In some designs, sensor validation is available that uses modal analysis to continuously monitor the sensor integrity and flowmeter accuracy.

The housing also protects the flow sensor from the effects of the surrounding environment; such as dirt, condensation, and mechanical interference. Often, the enclosure is filled with inert gas to help protect the element.

6.9.5 Installation

Improper installation is the cause of most problems with Coriolis meters. Coriolis meters are susceptible to mechanical vibration. The flow meter should be properly supported. The meter process connections should not be used as pipe supports. The pipe connections to the meter should be stress free.

If two or more Coriolis meters are mounted close together, interference through mechanical coupling or cross talk can occur. The manufacturer should be consulted on how to avoid this.

Although Coriolis meters are non-intrusive, in many designs the flow path through the meter is circuitous. The flow is generally separated into two paths that are smaller in cross sectional area than the inlet pipe. So it is relatively easy for a second phase to build up in an incorrectly installed meter.

The orientation of the metering tubes should be given the same consideration as pipe installation. Attention should be given the tubing configuration inside the meter.

To ensure free draining of the liquid from the curved measuring elements, liquid Coriolis meters normally should be installed in vertical lines. However, an Omega style liquid meter; that is a meter where total of the bends in a single measuring element is greater than 360°, should be installed in a horizontal line. If allowed by the supplier, the curved measuring elements should be mounted in the horizontal plane. Otherwise, they should be installed with curved measuring elements oriented downwards and with provisions made so that they can be blown clear during turnarounds.

In gas service, Coriolis meters should be mounted in horizontal lines with the curved measuring elements above the pipe axis. Further, the mounting of non-omega style gas meters in vertical lines provides acceptable drainage.

6.10 Thermal Dispersion Meter

Thermal flowmeters are mass flow devices. As a flow meter they are almost exclusively used in gas services. They are capable of measuring low flows, 6.1 cm/sec (0.20 ft/sec) of air at standard conditions, and are capable of turndowns of 100:1 or better. Thermal meters are effective for determining the mass flow rate of a fixed composition gas over a wide flow range. They are available in single- and multi-point configurations. Further, most meters have a temperature output option.

Thermal dispersion meters are calibrated for a specific gas. Flow is inferred from the fluid's physical properties, such as thermal conductivity and specific heat so they are composition dependent. Figure 25 shows the how the thermal conductivity of various gases is significantly different. Besides gas thermal conductivity, the output of a thermal meter is a combination of Reynolds number and the heat transfer characteristics of the sensor. Since this involves a complex relationship, individual meters are flow calibrated to a specific set of conditions. However, thermal conductivity is mostly pressure independent. Except for some older meter designs, temperature compensation is standard so pressure and temperature variations tend to have little effect on the meter's operation. Multiple calibrations that are electronically selectable can be furnished if more than one gas is being measured.

Because they are thermal conductivity dependent, continuous reading meters should not be used for hydrocarbon streams that are mixed with a non-hydrocarbon gas, particularly hydrogen. They do not work well in thermally conductive services. For liquids, they can only measure minute velocities or are used as a switch.

Provided by : www.spic.ir

Copyright American Petroleum Institute

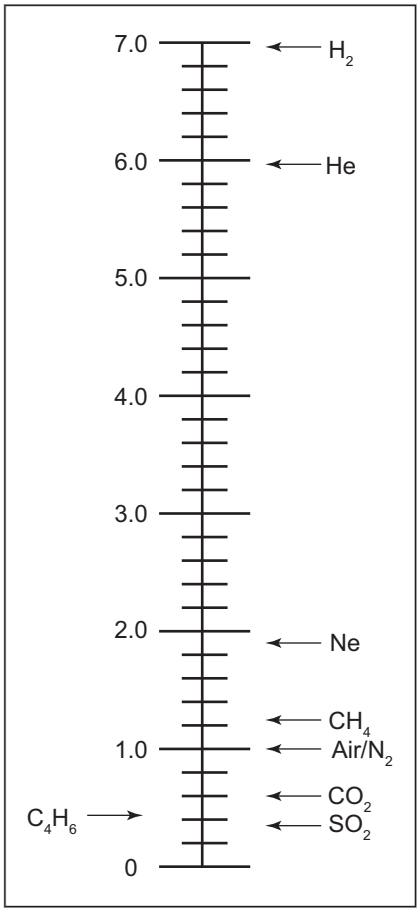

Figure 25—Relative Thermal Conductivity of Common Gases

This type of meter is inappropriate for refinery flare gas measurement because of the fluctuation of the hydrogen content. Also, it is not recommended for wet steam measurement or other fluids with entrained liquids. Liquid droplets may cause the sensor RTD to rapidly cool, affecting the reading. As a result, the flow indication can spike and return to normal once the moisture evaporates. Lastly, it's not recommended for streams where coatings can occur. When dust accumulates, the flow indication will trend downwards. Streams heavy with olefins or aromatic components should be avoided.

There are two types of thermal mass flowmeters: constant power and constant temperature. The first measures the stream temperature change as it passes over a heated body. The second measures the rate of heat loss from a heated body. The latter, constant temperature has the faster response.

They can be used as a flow switch for both gas and liquids. They are affective when minute flows are being monitored. Since they have a better measurement time response, the constant temperature type meter should be used, but another type of device should be used if a reaction time of less than five seconds is necessary. Also thermal flow switches should not be used with vapors with entrained liquids.

Single point probes need a fully developed profile. The straight run requirements without flow conditioners provided in ASME MFC-21.2-2010 Table 6.1.4-2 are similar to an orifice plate. Integral flow conditioners are recommended to shape the flow profile. This considerably reduces their straight run needs. See ASME MFC-21.2-2010, Table 6.1.4-1 for these requirements.

Error is introduced by Reynolds number variations that change the flow profile. Single point meters that are calibrated with air should not be used in services where accuracy better than 5 % of the Upper Range Value is needed, and

Provided by : www.spic.ir

--`,,,`````,`,`,```,,`,`````,-`-`,,`,,`,`,,`---
Copyright American Petroleum Institute

should not be used without a flow conditioner in any services where turndown below a Reynolds number of 40,000 is necessary. It is also desirable that the sensing element be furnished pre-fitted in a spool piece. This ensures that the installation effects associated with pitch, yaw, rotation, or insertion depth variations are eliminated.

Multi-probe versions have better accuracy, can provide turndown, and have reduced straight run requirements but at the cost of increased power consumption. With high turndown and the ability to resolve stratified flows, a multi-point thermal mass array may be useful for air flow duct applications.

Thermal meters are particularly affected by flow swirl. For analog measurements, they should be installed according to the recommended straight run requirements.

Thermal dispersion meters are limited to a typically maximum operating temperature of 205 °C (400 °F) or less. However, some versions can operate at 455 °C (850 °F) but have a higher power requirement. The bending moment and vortex shedding harmonics should be considered as well.

The power wire size should be estimate based upon a consumption of 7 to 16 watts for a single point flow transmitter. The power consumption is relatively high and makes it marginal for being powered with 24 volts from an instrument building with standard 18 AWG wire. A multi-point device has a proportionally higher power use. Flow switches use between one and four watts depending on the model. Two wire 4-20mA bi-stable flow switches are also available. See ISO 14511 for further information on thermal meters.

7 Level

7.1 Introduction

This section covers the recommended practices for installation and application of instruments and devices used for absolute and interface liquid level measurement that are commonly encountered in petroleum refineries. For inventory or other maximum accuracy gauging, refer to API *MPMS* Ch. 3.1B, API *MPMS* Ch 3.3, and API *MPMS* Ch. 3.6.

7.2 Vessel Connections

7.2.1 General

For temperature and pressure measurements vessels the nozzles are usually minimized to reduce leak sources. Rather, they are placed in adjacent pipe when possible. Also the fittings between the vessel and block valves are minimized to maintain mechanical strength.

To avoid dead legs with the lower vessel taps, the submerged connections and the associated piping should drain back into the vessel. Dead legs, particularly in hydrocarbon service, serve as collection points for water and scale resulting in incorrect measurements. The water also freezes in cold weather. Where pockets are unavoidable, low point drain valves should be provided.

Frequently, to facilitate vessel blinding as well as provide additional strength, a minimum of eight bolts are needed for vessel connections, so a 2 in. NPS Class 300 flange is often the minimum flange size allowed. However, 2 in. pipe is too large for most instrument connections. Table 12 lists the typical process pipe connection sizes to interface with instrumentation.

Only when there is no other option should a level measurement nozzle be attached to a process line. The hydrostatic pressure measurement on the outlet pipe from a vessel is less than the reading on the vessel nozzle. The liquid in the vessel is essential at rest while the fluid in the pipe is in motion. Accordingly, to maintain the Bernoulli energy balance the hydrostatic pressure decreases as velocity is introduced to the fluid resulting in a low reading.

The fluid velocity should be less than 0.6 m/sec (2 ft/sec). See Figure 27. Regardless, a low velocity results in large error with narrow instrument ranges.

Provided by : www.spic.ir

--`,,```,,,,````-`-`,,`,,`,`,,`---

Copyright American Petroleum Institute

Table 12—Typical Piping Interface with an Instrument

Thermowell	1 1/2 in.	FLG
Level Switch Chamber	1 in.	FLG
Non-Contact Radar	4 in.	FLG
Displacer	2 in.	FLG
Magnetic Level Gauge	2 in.	FLG
Differential Transmitter *	3/4 in.	NPT
Level Glass	3/4 in.	NPT
Pressure Gauge or Transmitter *	3/4 in.	NPT
Gauge Cock Vent & Drain Connection	1/2 in.	NPT
Gauge Cock Connection to Process	3/4 in.	NPT(M)
Gauge Cock Connection to Glass	3/4 in.	NPT
Displacer Vent & Drain Connection	3/4 in.	NPT
Magnetic Gauge Vent & Drain Connection	3/4in.	NPT

* Instrument Installation Details are used from the piping interface point to the actual instrument.

7.2.2 Range Selection

To determine the maximum process liquid level, for most services, a liquid holdup time of between 5 to 10 minutes is used to ensure controllability and safety. Consequently, there is between 2 1/2 and 5 minutes between the normal mid-range set point and loss of measurement. Most level control loops have time constants less than this.

The standard level instrument range is 10 % to 20 % above the maximum liquid level. On a vertical vessel the maximum liquid level is calculated from the 150 mm (6 in.) elevation point above the lower tangent line. No credit is taken for liquid below this point or the vessel head. Historically, the minimum recommended level instrument range is 300 mm to 350 mm (12 in. to 14 in.). Consequently, the lowest upper range value for a level transmitter is 460 mm (18 in.) from the lower tangent line of the vessel.

7.2.3 Nozzle Elevations

To avoid stress concentration areas on vertical vessels, the minimum and maximum elevation for instrument nozzles should be 125 mm (5 in.) + $d/2$, rounded up to the nearest 25 mm (1 in.) from the tangent line of the vessel. Where "d" is the diameter of the instrument connection. The vessel connection is typically a 2 in. NPS nozzle, so for smaller instrument connections,150 mm (6 in.) is the accepted elevation.

Lower taps are possible on horizontal vessels since the stress concentration areas are absent. The minimum tap elevation is based upon constructability. The minimum distance to the ID of a horizontal vessel is $0.07 \times$ (ID) for nozzles 2 in. and smaller. For larger nozzles the minimum elevation is $0.15 \times$ (ID). Connections lower than this result in long nozzle projections.

The use of side-side connected instruments should be avoided to allow flexibility in installing the instruments. Sometimes the instrument nozzles are not installed with the correct spacing or the necessary vertical alignment. Thermal expansion causes this problem to be worse for a nozzle spacing that is greater than 2450 mm (8 ft). If side-side instruments cannot be avoided, a jig fit by the vessel fabricator is recommended.

Provided by : www.spic.ir

Copyright American Petroleum Institute

The minimum recommended elevation for the upper tap is 150 mm (6 in.) above the instrument range. To achieve maximum use of the vessel inventory the upper tap of a differential transmitter should be set as high as practical without creating the need for another platform.

On the other hand, the elevation of the upper tap might have to be adjusted downwards to fit the available differential transmitter ranges. With older transmitter designs with limited turndowns, the amount of span turndown available with the transmitter could be exceeded if the upper tap is set too high. So when using older differential transmitters the span and zero elevation or zero suppression should be reviewed to ensure that the transmitter can be calibrated to the required value, see 3.3.3 concerning this issue.

The upper tap for differential level transmitters should be below the mist eliminators or other internals that have significant pressure drop. For distillation columns the upper tap should be set at least 150 mm (6 in.) above a reboiler inlet.

For vessels suspended in process buildings; i.e. vessels designed for top access, should have their upper taps in the vessel head. This keeps walkways clear of minor pipe and avoids the need for a vessel ladder.

7.2.4 Vessel Head Connections

Connections to bottom vessel heads should be avoid since exact positioning is difficult, dead legs are created and often the vessel skirt has to be penetrated.

However, when bottom entry is unavoidable, an extension pipe with a cover is recommended according to Figure 27 and low point drain is a necessary part of this design.

The top of the extension pipe determines the low point of the level range and is the only dimension that should be specified. This leaves design flexibility in locating the nozzle and still sets the instrument range. However, the top of the extension pipe should not be below the knuckle radius ($0.138 \times$ Vessel ID) for a standard ASME 2:1 vessel head. Liquid inventory below this point is minimal and is extremely nonlinear.

Another alternative is to mount a GWR transmitter, bubbler or other probe type instrument at an angle to measure the liquid in the head. See Figure 34.

7.2.5 Displacer Vessel Connections

For displacer vessel connections the following recommendations apply.

a) Level displacers should have 2 in. NPS flanged connections.

b) Drain valves $^1/_2$ in. NPS or larger should be provided and if vents are needed they also should be $^1/_2$ in. NPS or larger.

c) The top connection for top-side connected displacer should be (see Figure 31, third panel) the displacer range plus 355 mm (14 in.).

d) Interface measurements require their own connections into the upper and lower phases.

e) If the range is greater than 1220 mm (48 in.), it is better to use another transmitter type.

7.2.6 Float Switch Connections

Float switches dimensions should be assumed to be 460 mm (18 in.) between flanges. The trip point can be determined according 7.4.2 d) methods. These dimensions apply to almost all standard top-side level switches with specific gravities greater than 0.6 and have a rating up to ANSI Class 600. If larger dimensions might be

Provided by : www.spic.ir

Copyright American Petroleum Institute

needed, 560 mm (22 in.) should be adequate. Connections should be provided to introduce a calibration fluid that reflects the actual operating conditions.

7.2.7 Pressure Measurement

Pressure measurements can be made on vapor process lines next to the vessel to avoid extra nozzles. Care should be taken so that the pressure measurement point is inside the vessel block valves.

Still, it should be understood that the pressure measurement on the outlet pipe from a vessel is less than it would be on the vessel. The vapor in the vessel is motionless while the fluid in the pipe has velocity. To maintain the energy balance the static pressure in the pipe has to decrease to compensate for the vapor movement.

Direct pressure nozzles are be needed for the following services:

— pressure at a column bottoms measure pressure drop across trays or packing;

— below mist eliminators to measure plugging;

— suction drums of reciprocating compressors to avoid pulsation;

— vessels (e.g. distillation columns or absorbers) if a precise measurement is needed.

7.2.8 Level Glass Connections

For wide level ranges, a bridle and overlapping gauge glasses can be used, as shown in Figure 26. The bridle, usually a 2 in. to 4 in. NPS pipe, acts as a support.

End connected level glasses are preferred due to their flexibility. The minimum distance between connections for end connected level glasses *without gauge* cocks is 250 mm (10 in.) plus VL where VL is the visible length of the level glass. If more than one level glass is needed to cover a range they should be provided with a minimum of a 25 mm (1 in.) overlap. Top-back or top-side connected level glasses are discouraged due to connection complications. Bottom-side connected may be considered for vessels with a maximum liquid level less than 760 mm (30 in.).

The standard connection between the gauge cock and the ends of a level glass is a $^{3}/_{4}$ in. NPT nipple, which is fitted during the gauges installation on the vessel. However, welded nipples can be supplied. In these cases designed and installation is handled in the same manner as an inflexible side-side type gauge. See 7.2.3 concerning side-side connections.

7.2.9 Thermowells

When possible, temperature measurements should be taken on liquid outlet lines. Thermowell placement should be selected so that they do not conflict with vessel internals such as tray supports, agitator blades, weirs, etc.

The tray position of temperature for composition control or measurement can be determined from a plot of temperature versus the physical trays. The ideal point of measurement should have a linear plot with a 2.8 °C (5 °F) or greater differential from the trays above and below it. Also to ensure acceptable control the measurement should be close to where the liquids, vapors or energy enters and exits the column.

Liquid temperature measurement thermowells in distilling columns are above the tray. Since they are difficult to position, measurements in tray downcomers are not recommended. However, if the thermowell is located in the downcomer, it should be located 50 mm (2 in.) above the next tray.

For control purposes, measuring the temperature above the tray provides a faster response. The space above the tray consists of extremely agitated two phase material with excellent fluid transfer properties. It is recommended that the thermowell be located in the lower third of the space above the tray. Placing the thermowell closer to the tray can

Provided by : www.spic.ir

Copyright American Petroleum Institute

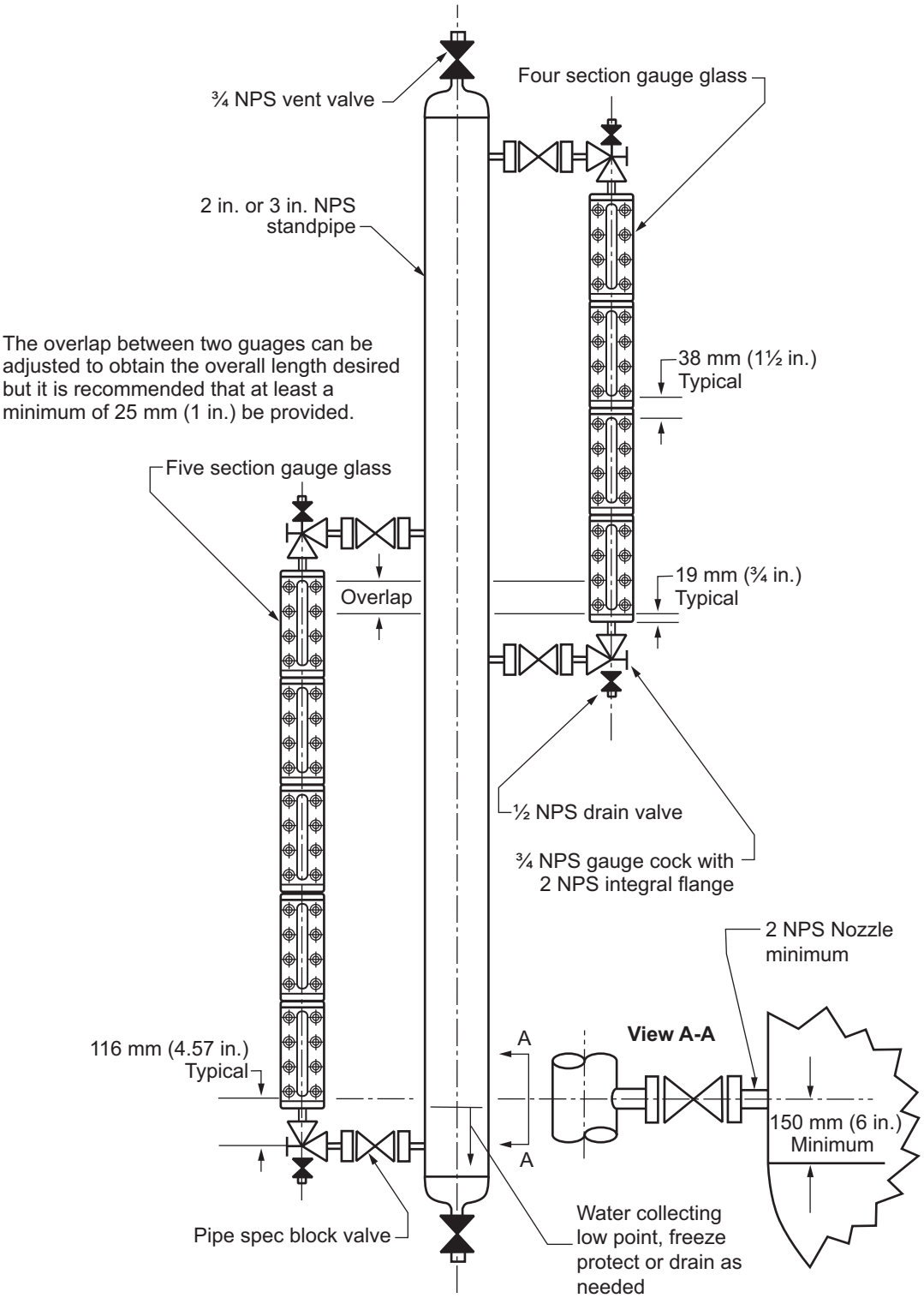

Figure 26—Gauge Glass Assemblies

Provided by : www.spic.ir

Copyright American Petroleum Institute

Detail A

The stand pipe inlet should have two rows of holes. Each should have a minimum of eight 4 mm (0.125 in.) ID holes. The holes should be smooth and the edges deburred. An even number of holes on each row should be provided equally spaced. The rows should be 25 mm (1 in.) apart. The cap plate on the inlet pipe should be round and its diameter $A = D + 2(C)$

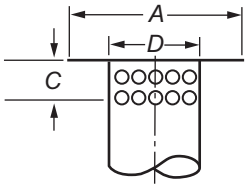

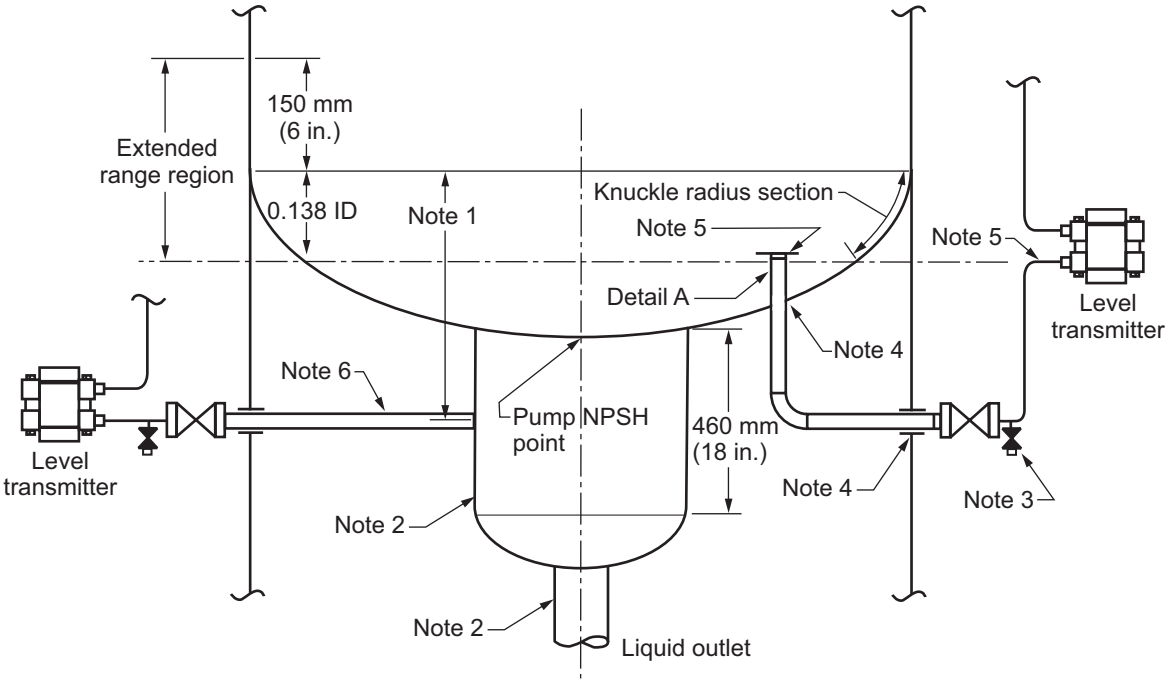

NOTE 1 The transmitter elevation for a standard 2:1 elipse head is 0.25 ID + 230 mm (9 in.) below the tangent line.

NOTE 2 Taps should not be attached to liquid lines. The measurment error in mm due to velocity is $1.05(10)^{-6}V^2$ (m/sec) or for inches $0.186V^2$ (ft/sec) A 4:1 diameter ratio between line and level boot decreases the velocity effect by a factor of 16.

NOTE 3 Supply low point drain valve to flush water, solids, etc.

NOTE 4 Skirt and head penetration located according to general plant and process requirements.

NOTE 5 Transmitter is at the same elevation as bottom row of holes on the stand pipe inlet.

NOTE 6 Level tap should free drain into vessel.

Figure 27—Instrument Connections to Bottom Heads

help during low column loadings when there is less liquid entrainment, particularly if it is below the edge of the tray weir, but the response time is increased. Plus it is more likely that conflicts with the internals could occur.

Mounting the thermowell significantly above the liquid entrainment point is needed for vapor measurement. However, tray support rings limit how far below the next tray the thermowell can be placed. Further, the thermowell should not be placed in the shadow of a tray support.

When acceptable, it is recommended that the vapor temperature measurements be made in the closest chimney. However, because of fabrication coordination problems, it is recommended that the tray supplier provide the thermowell.

Provided by : www.spic.ir

Copyright American Petroleum Institute

Typically, a 300 mm (12 in.) thermowell immersion inside the tower is sufficient. Longer wells have more risk of interfering with the tower internals; e.g. a downcomer, tray valves, weirs, supports, feed distributors, etc.

Nozzles fabricated from 1 in. Schedule 160 pipe do not pass 1 in. ASME thermowells. Weld neck nozzles are recommended. Unlike pipe, weld neck nozzles have a standard ID and their OD increase with increasing schedule. Using $1^1/_2$ in. thermowell nozzles avoids most problems. Also refractory lined and clad thermowells should have their flange sizes increased to account for the additional material.

7.2.10 Bridles

Instruments can be connected to vessels by using a bridle, chamber, stilling well, cage, bypass pipe, or standpipe. However, bridles have been found to be a source of measurement inaccuracy. See 7.6.2.

Still, bridles act as surge chambers filtering turbulence and they keep foam from overflowing into the instrument. Bridles allow design flexibility and help minimize the number of nozzles on a vessel. Regardless, critical shutdowns should have their own connections.

The size of the bridle should be adequate to support the attached instruments. Three and four inch NPS bridles are recommended to support multiple sections of gauge glasses. The size should also be increased to maintain the level transmitter taps at the same elevation.

7.2.11 Block Valves

The nozzle block valves and pipe fittings should be selected for the service conditions. The material and rating of the block valves should match the pipe specification associated with the vessel. This also applies when the valves are installed on a bridle as well as the between the vessel and the bridle.

Block valves should be provided so instruments can be individually isolated. Block valves should be provided between the vessel nozzle and the bridle for cleaning and maintenance. When the instrument is connected to a flanged vessel nozzle the valve and connection should be $\geq 1^1/_2$ in. and $\geq {}^3/_4$ in. in size when connected to a bridle.

7.2.12 Drain and Vent Connections

Drain valves should be installed on the bottom connection of level instruments and provisions made for the appropriate disposal of the drained material. Vent valves are provided to allow de-pressurization of the instrument prior to draining. In toxic services, drains and vapor vents should be piped away from the instruments to a safe area or disposal system.

If hydrocarbons are in a water measurement service, then an appropriate means should be provided for their removal and disposal. Similarly in hydrocarbon service if amines are possible, an appropriate means should be provided for draining them into an appropriate facility.

Requirements established by the regulating authority (e.g. U.S. Environmental Protection Agency) should be addressed. Typically for hydrocarbons, pipe plugs or a secondary block valve is needed on vent and drain outlets.

7.2.13 Strain Relief

Long bridles or several heavy instruments can place unacceptable loads on the vessel nozzles. This can be a problem with horizontal vessels, which often have extended nozzles. Vessel connections to bridles, displacers, magnetic gauges, etc. should be kept strain free by separately supporting the instrument.

Further, for tap spacing greater than 2440 mm (8 ft) installing offsets or expansion loops are often necessary to compensate for differences in thermal expansion. A pipe stress evaluation should be made to confirm the adequacy of the bridle design and its supports.

Provided by : www.spic.ir

Copyright American Petroleum Institute

7.3 Level Transmitters

7.3.1 General

Level transmitters use a wide variety of measurement principles, including radar, buoyancy, both positive and negative, differential pressure, nuclear radiation, RF capacitance/admittance, and ultrasound.

7.3.2 Hydrostatic Measurement

7.3.2.1 General

Hydrostatic pressure measurement is the most common means of level measurement. For most applications, differential transmitters are preferred because the range selection is flexible and its use is widely understood. They are used with open and enclosed vessels as well as sumps. Differential transmitters are usually connected to the side of a vessel or tank. Submersible transmitters intended for sumps are free hanging, but operate in the same manner.

For open tanks or vessels with only one connection the installation is fairly straight forward. The transmitter high pressure port is connected to a vessel tap at the lowest point that is practical. The low pressure port is open to the atmosphere and it is protected by a vent fitting or port protector.

With enclosed or pressurized vessels, there is additional vapor pressure above the liquid level so compensation for the internal pressure is required. Since the vapor pressure is not part of the liquid level head, it must be subtracted from the overall pressure measurement. This is accomplished by connecting the “low pressure” port of the differential pressure transmitter to the vapor space above the liquid.

This connection can be made using either a dry leg or a liquid filled wet leg. With a wet leg, the low-side reference leg is filled with liquid. Dry legs are used when the vapor does not condense. Dry legs have the disadvantage that condensing vapors or over flowing liquids can cause the indication to read low.

Wet leg differential level transmitters are a more robust form of hydrostatic pressure measurement. Wet legs are used when the vapor blanket in the tank will condense into a liquid form. Filling the “low pressure” or reference port with a fluid with a known composition helps ensure an accurate measurement. See PIP PCILI100 for typical level installation details for open and enclosed vessels.

7.3.2.2 Wet Leg Differential Pressure Level Measurement

Differential pressure transmitters can be calibrated to read across their entire span both in the positive and negative directions. The flexibility to reduce the span as well as ability to elevate or suppress the zero is what makes the use of filled reference leg level transmitters possible. See Figure 28 on how to calculate the range values needed for calibration.

Pneumatic differential transmitters and bellows meters require a special modification to be used as level instruments. When used with filled legs they should have a zero elevation kit.

The transmitter has to be biased to cancel the offset of the filled leg. With a seal leg, the net differential on the transmitter is negative. The transmitter “high pressure” port operates at a lower pressure than the “low pressure” port. The equations shown in Figure 28 are based upon this arrangement. Also, see 3.3.3 concerning span limits.

Normal practice connects the transmitter high pressure port to the vessel lower nozzle. The low pressure port is connected to the vessel upper nozzle. With a wet leg the measured differential on the transmitter decreases and becomes less negative as the process level rises.

Prior to transmitter installation, the type of linearization provided should be verified. Differential transmitters can also be furnished without the negative regime being linearized. This is an effective technique for improving the accuracy of non-zero crossing measurements. A 1 % or larger error could occur when the low pressure port has a positive pressure relative to the high pressure port. For level measurements with wet legs, the high pressure port is connected

Provided by : www.spic.ir

Copyright American Petroleum Institute

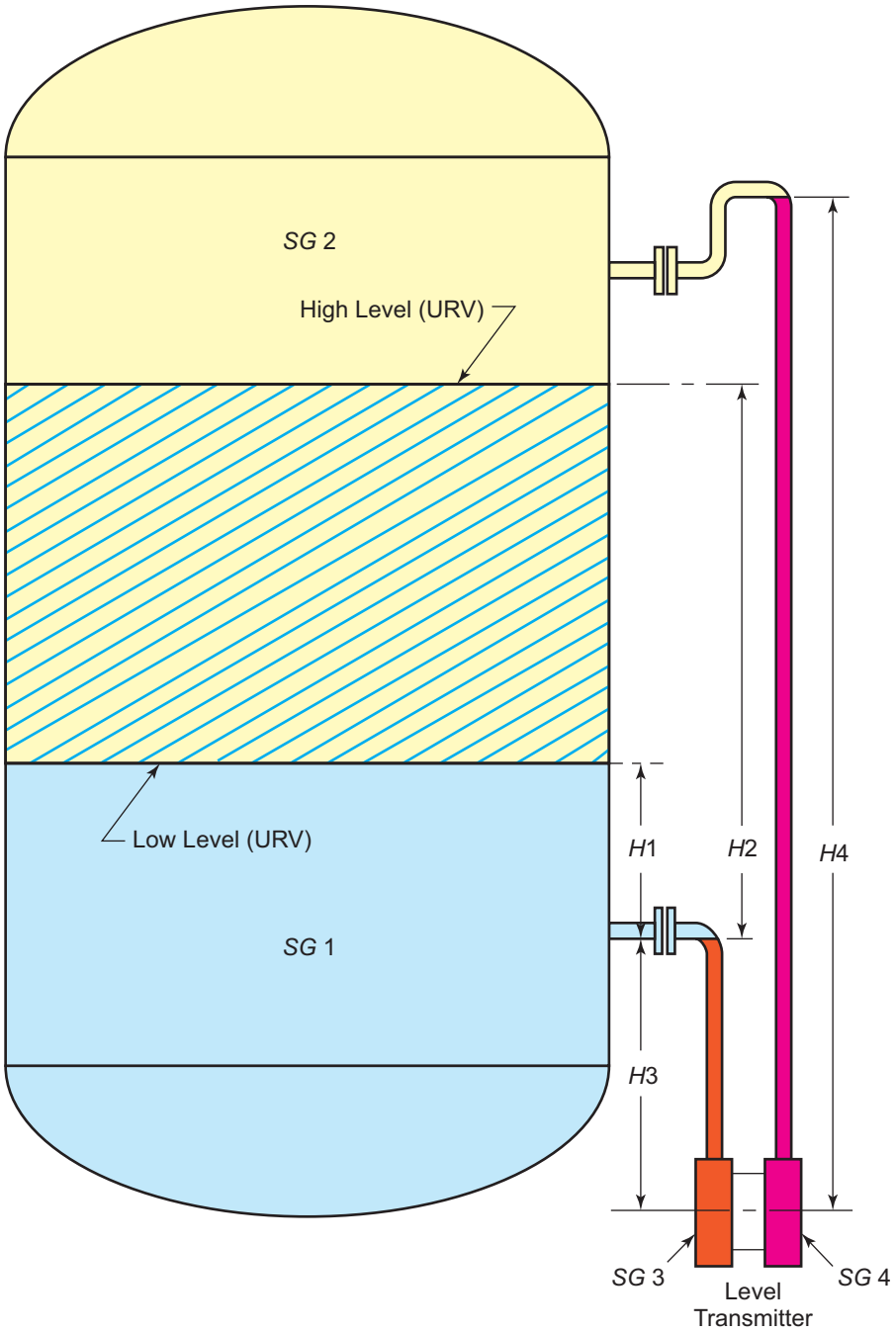

$$URV = [SG_3(H_3) + SG_1(H_2) + SG_2(H_4 - H_2)] - SG_4(H_4)$$

$$LRV = [SG_3(H_3) + SG_1(H_1) + SG2(H_4 - H_1)] - SG_4(H_4)$$

$$SPAN = |URV - LRV|$$

Figure 28—General Formulas for the Calibration of a Differential Level Instrument

Provided by : www.spic.ir

Copyright American Petroleum Institute

to the upper vessel nozzle rather than the normal practice of connecting the low pressure port. A suppressed zero is used in the calibration.

However, the output signal has to be inverted so a rising vessel level causes an increasing signal but this is not a problem with a configurable transmitter. This is handled automatically during the configuration process. The upper range value is entered as a positive number for the lower output signal. Similarly the lower range value is entered against the upper output signal.

Filling facilities are needed for the wet reference leg of the transmitter. A filling tee should be provided at the reference leg high point. This point is usually even with the upper nozzle but setting it higher can encourage self-purging by the process fluid if it condenses at ambient conditions. This can help prevent contamination of the fill fluid. However, an overly long self-purging section can cause excessive condensing that can result in a noisy slug flow signal. See 8.3.5 concerning two phase flow in impulse lines.

Further, a filling connection with a valve is recommended by the transmitter preferably at the back of the transmitter (see Figure 29) so the entire system is swept as the fluid is replaced. Once the filling fluid is in place, the system can be zeroed after venting the other transmitter port.

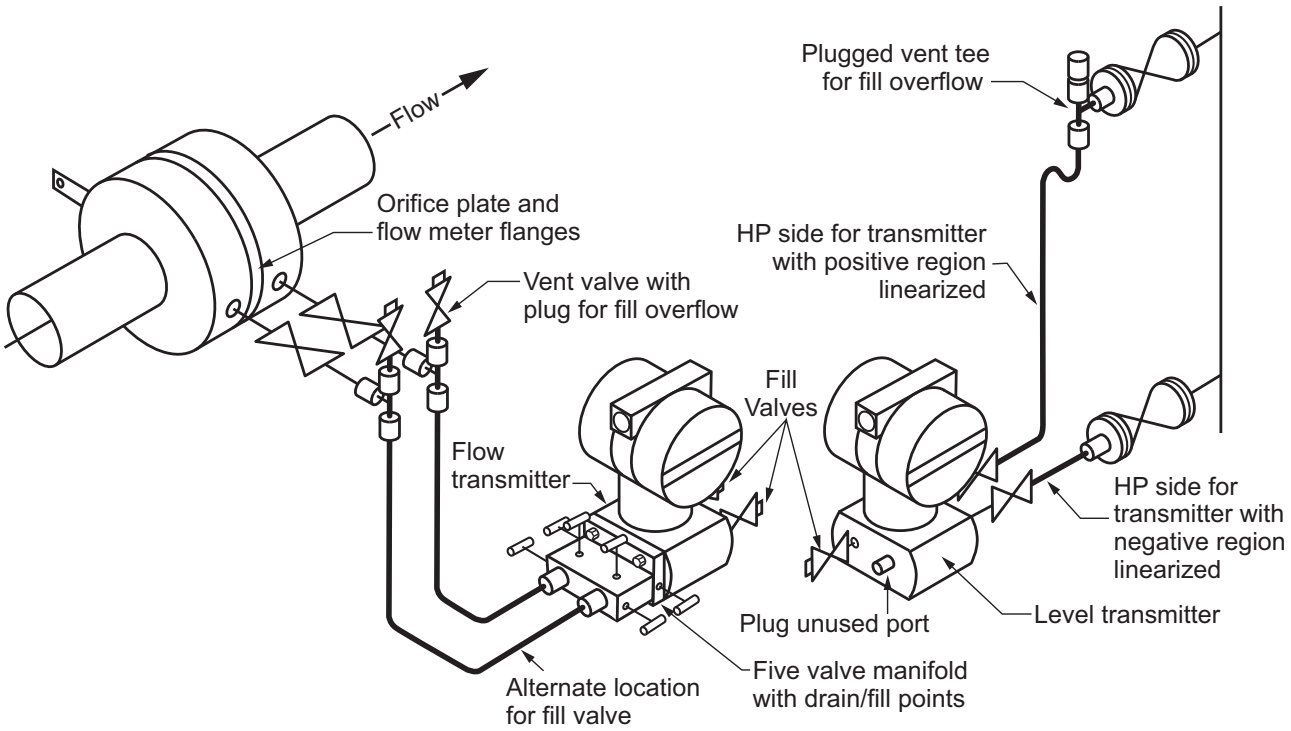

Figure 29—Differential Level Transmitters with Wet Legs

A suitable liquid seal should be used with vacuum service or volatile liquid services. A low vapor pressure seal liquid prevents boiling in the reference leg. It also could be needed to protect the sensing capsule's fill fluid from boiling. See 9.3.1 for liquid seal selection.

The following applies to installation of differential pressure transmitters in level measurement services.

a) To ensure that the transmitter output reaches 100 % for every operating condition, the calibrated span of the differential pressure type level transmitters should be based on the minimum process fluid specific gravity as well as the maximum seal leg specific gravity.

Provided by : www.spic.ir

Copyright American Petroleum Institute

b) To eliminate errors caused by process fluid specific gravity changes, it is recommended that the transmitter centerline be at the same elevation as the lower process connection. This also makes the zeroing of transmitter's wet reference leg easier.

c) Transmitters should not be mounted above the lower nozzle. Otherwise, the portion below the transmitter is not measured.

d) Avoid mounting the transmitter below the lower nozzle. This creates a low spot for water and sediment to accumulate.

e) The lower transmitter tap should be place where it cannot be blocked by sediment.

7.3.2.3 Flange Level Transmitters

For slurries, viscous or dirty fluids a 3 in. flange diaphragm that is integral to the transmitter body can be installed. A bleed or flushing ring that has dual flushing connections equipped with valves should be provided for calibration and maintenance decontamination as well as clearing of sedimentation or debris.

The diaphragm could be supplied with an extension to eliminate the liquid pocket in the vessel nozzle. However, the transmitter cannot be isolated from the vessel so extended diaphragm transmitters should be avoided with continuous processes. Otherwise, taking the vessel out of service for instrument replacement is needed.

Diaphragm extensions are usually used with batch and other cyclical operations where they can be replaced while the vessel is offline. Also, matching the nozzle ID has to match the extended diaphragm diameter; most do not fit into a Schedule 160 nozzle and others do not fit into a Schedule 120 nozzle.

7.3.2.4 Liquid Level Measurement with Diaphragm Seals

Diaphragm Seals are effective in liquid level measurement and are preferred over purged systems for difficult applications. Maintaining the fill composition in a wet reference leg is eliminated, plus ensuring that a dry reference leg is free of liquids.

Diaphragm seals have the further advantage, unlike conventional wet differential measurements, hydrostatic pressure changes can be detected below the transmitter mounting point; i.e. it can be mounted above the tap. The same equations in Figure 28 should be used to determine calibration for diaphragm seal transmitters.

See 9.2 for more detailed information on the application of diaphragm seals.

7.3.2.5 Submersible Hydrostatic Pressure Transmitters

Submersible hydrostatic pressure transmitters are available for top connected hydrostatic level measurements. The transmitter's internal pressure is relieved to atmospheric with a breather tube that runs through a combined hose and cable assembly.

For outdoor measurements, to prevent moisture ingress and condensing at the bottom of the tube, the breather tube can be protected with vent filters, bladder/bellows, or desiccant dryers. The bladder/bellows assembly seals the end of the vent tube and is flexible enough to compensate for barometric pressure variations and temperature volume changes.

Still, the bellows is not a suitable replacement for a desiccant cartridge where an accuracy better than 0.25 % is desired. Desiccant dryers have color indicating silica requiring periodic replacement, generally once a year. Otherwise, simple vent filters work acceptability when the liquid temperature above the ambient temperature. This drives off any moisture condensation.

Provided by : www.spic.ir

--`,,,`````,`,`,```,,`,`,`,,`,`,,`---

Copyright American Petroleum Institute

7.3.2.6 Steam Drum Level Measurement

For boiler steam drums operating over 2.07 MPa (300 psig), the density or temperature compensation fitting shown on Figure 30 may be considered. This fitting prevents sub-cooling by circulating condensate so that both legs are at the steam saturation temperature. The level in the center tube moves with the steam drum level. The transmitter high pressure port reads the head created by the fluid in the center tube.

The transmitter low pressure port is connected to the fitting's annulus space. The top of the fitting is not insulated. The annulus is continuously filled by steam condensing at the top of the fitting. By overflowing the condensate from the internal reservoir through to the lower water tap a constantly circulating flow is established.

The density compensation fitting ensures that the measurement and reference legs are at the same temperature and density.

The density compensation fitting provides the following advantages:

a) eliminates seal fluid loss;

b) minimizes seal leg density variations;

c) keeps the measurement leg at the operating temperature;

d) provides a continuous condensate flow that reduces fouling.

7.3.2.7 Steam Drum Startup

Typically, density compensation of level transmitters is not provided because most steam systems operate near their design pressure. However, during start-up the absence of compensation causes the level transmitter to read incorrectly. This is particularly important with a boiler steam drum since they are small relative to the total volume and operate across a narrow level range. The local level indicator needs to be monitored during start-up since the cooler denser water causes the transmitter to read high. Another approach to obtain a corrected steam drum level is to use a pressure transmitter that uses the steam pressure to determine the density of the saturated liquid.

Re-zeroing the level transmitter is not effective; only the span is influenced. The density compensation fitting is not effective for this problem either. It only ensures that the liquid seal is at the same temperature as the drum. See ISA TR77.42.02-2009 for further details on boiler drum level measurement. See 7.5.3.4 concerning specific gravity issues.

7.3.2.8 Bubbler Level Measurement

Hydrostatic head can be transmitted using a bubbler tube. They are a form of purge. Level is measured by reading the hydrostatic back pressure in a vapor filled tube. Bubblers have the advantage that they can measure levels in below ground sumps and open top equipment without requiring nozzles at the side.

Bubblers with a differential pressure transmitter can be used to measure level in atmospheric sumps. Long tubes should be supported so that turbulence or other mechanical forces do not bend them. For a $^{1}/_{2}$ in. tube, an unsupported length greater than 1220 mm (4 ft) is unacceptable. Also, the dip tube should stop prior to where sediment or sludge can plug it.

When local indication is needed, or a gauge hatch is not allowed, a metal bellows type pressure gauge with standard inches of water column scale can be used as a local indicator. Ranges up to 38 kPa (150 in. $WC_{20°C}$) are available. Ranges beyond this require a scale factor or a new face silk screened or laminated onto the existing dial.

Provided by : www.spic.ir

Copyright American Petroleum Institute

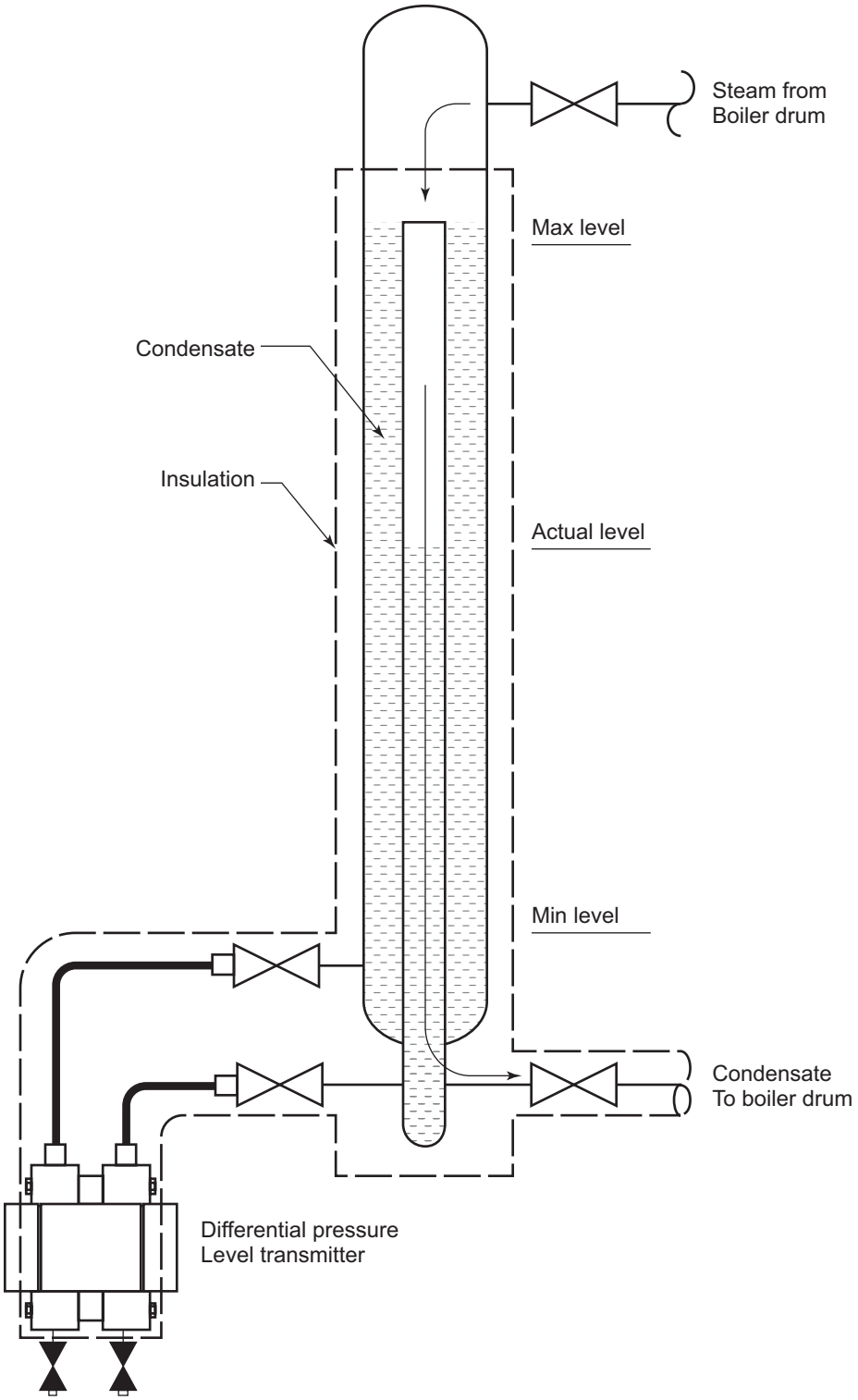

Figure 30—Steam Drum Density Compensation Fitting

Provided by : www.spic.ir

Copyright American Petroleum Institute

The tube tip should be cut at a 45° angle or given a vee notch. The cuts should be de-burred to enable a continuous flow of uniform bubbles. The upper end of the dip tube should have a tee to allow rodding without disconnecting the instrument. Level bubblers should also be located where there is overhead clearance for their removal.

In pressurized tanks, two sets of dip pipes are used to measure level. The two dip pipes are connected to either side of a differential pressure gauge or a differential pressure transmitter. However, bubblers add a non-condensable into the system, which eventually has to be removed.

The gas supply control uses a rotameter or sight feed bubbler. A sight feed bubbler provides a visual indication of the bubbles. They discharge from the end of a submerged dip tube that is inside a transparent bowl. These bowels are over-designed and are rated for 690 kPa (100 psig.) The bubble rate is controlled by a needle valve in the head casting. One problem with sight feed bubblers is that, unless a low vapor pressure fill fluid is used, the liquid evaporates over time.

A bubbler rotameter should have a range of 0 cc/s to 470 cc/s (0 ft^3/min to 1 ft^3/min) and be equipped with an integral needle valve. Differential regulators are used with services that require a precise measurement or where the supply gas pressure varies. A hand pump can provide the purge air in remote locations.

A bubbler's economics varies considerably depending on the availability of a suitable purge gas. With the acceptance of two-wire top mounted sonic and radar transmitters, bubblers are mostly viewed as legacy devices.

7.3.3 Displacement

7.3.3.1 General

Displacers are negative buoyancy devices that measure the liquid level in the vessel. The displacer element only has a slight movement. A displacer torque tube has 4.4° of rotation.

They are a versatile device. Displacers are used for level, interface, and density measurement. They are self-flushing. Water that precipitates in the chamber or is washed into it through the upper nozzle drains out the bottom nozzle. They are effective at measuring interface. With a standard torque tube and displacer element they can resolve between an upper and lower phase within 96 Kg/m^3 (6 lbs/ft^3) or 0.1 S.G. Their sensitivity can be increase by using a light wall torque tube and increasing the diameter of the displacer element.

Besides increasing the sensitivity for density measurement, a bellows type displacer element can provide temperature compensation. Further, a Piezometric ring can be installed in the middle to eliminate flow affecting the density measurement.

To provide flexibility the head should be attached to the chamber with an eight bolt flange or a wafer type head should be used. With a wafer or eight bolts the head can be rotated in 45° steps on the chamber, further the torque tube can be mirrored to the opposite side. This enables the head to be in sixteen different positions. Also the head of an external displacer can be moved up by lengthening the hanger rod and using a transition piece. This allows accessing the head from a higher platform.

Displacers are provided primarily in five standard lengths of 14 in., 24 in., 32 in., 48 in., and 60 in. Standard whole number metric equivalents do not exist. Beyond that they are available in 1 ft increments up to 10 ft. Due to weight reasons, as well as differential thermal expansion problems, the maximum sized displacer typically used is 48 in. or 60 in. Also, long units are difficult to maintain. Custom intermediate sizes, possibly with some minor loss in sensitivity, can be fabricated when needed.

For measurement, they use either a torque tube or an internal coiled spring. Being spring based sensors, they need a high degree of corrosion resistance. The coiled spring is more prone to coatings than the torque tube. However, if a torque tube fails it can release vapors. Consequently torque tubes are a material like UNS N06600. Also available are Type 316L Stainless Steel (UNS S31603), UNS N05500, and N10276.

Provided by : www.spic.ir

Copyright American Petroleum Institute

Displacement instruments in services less than –29 °C (–20 °F) or greater than 205 °C (400 °F) should be provided with an isolating extension to keep the torque tube near ambient conditions and prevent electronic failure. Fin type extensions, which are no longer available, tended to corrode.

Pressure and temperature limits apply to the displacer element. Typically a displacer element is rated from full vacuum to 13.8 MPa (2000 psig.) For flange ratings greater than Class 1500 solid aluminum or TFE elements should be considered to resist being crushed.

7.3.3.2 Internal Displacers

To address process problems, a displacer can be mounted inside a vessel. An internal displacer is sometimes used for asphaltic and waxy fluids. They are useful for emulsions or liquids that contain particles; e.g. coking services. Particles can settle out and eventually block an external displacer chamber.

The instrument head has a 3 in. or 4 in. mating flange. The flange has to be bigger than the element that goes into the vessel. When the displacer is subjected to turbulence inside the vessel, then shields, guides, or other protection should be provided. Sufficient overhead clearance should be furnished for element removal.

For internal displacers positioned next to the vessel shell a stilling well is usually provided. Rod or ring guides are also used to steady the element. Ring guides are particularly useful for emulsion services. An adjacent manhole is recommended for maintenance.

Nevertheless, internal displacers are usually avoided, particularly on vessels that cannot be isolated and cleaned without a shut down. Instead, steam traced and purged external displacers are usually the accepted alternative.

7.3.3.3 External Chambers

External displacer chambers are provided in three basic connection styles: Side/Bottom, Side/Side, and Top/Side. See Figure 31 for these piping arrangements. Normally, they are proved with a 2 in. flange connection, but $1^1/_2$ in. and 2 in. threaded or socket connections are also available.

As a minimum, the external displacer chambers should be fabricated according to ANSI B31.3 requirements. However, in some circumstances displacer chambers are built to ASME BPVC codes; e.g. Section VIII. See 7.5.3.1 if the latter is needed.

Displacer installations should have a bottom drain oriented downwards to allow a probe to check or even free the displacer element.

Using a chamber with a top nozzle for the upper connection with a lower side nozzle can provide dimensional freedom. A custom spool is fabricated for connecting the displacer top nozzle to the vessel.

Since they are non-standard devices, displacer chambers requiring connections beyond ANSI Class 600 or made from alloy materials should be avoided.

7.3.3.4 Calibration

There are at least four methods for calibrating a displacer:

a) in-place calibration;

b) bench calibration with liquids;

c) bench calibration with weights;

d) calibration stops.

Provided by : www.spic.ir

Copyright American Petroleum Institute

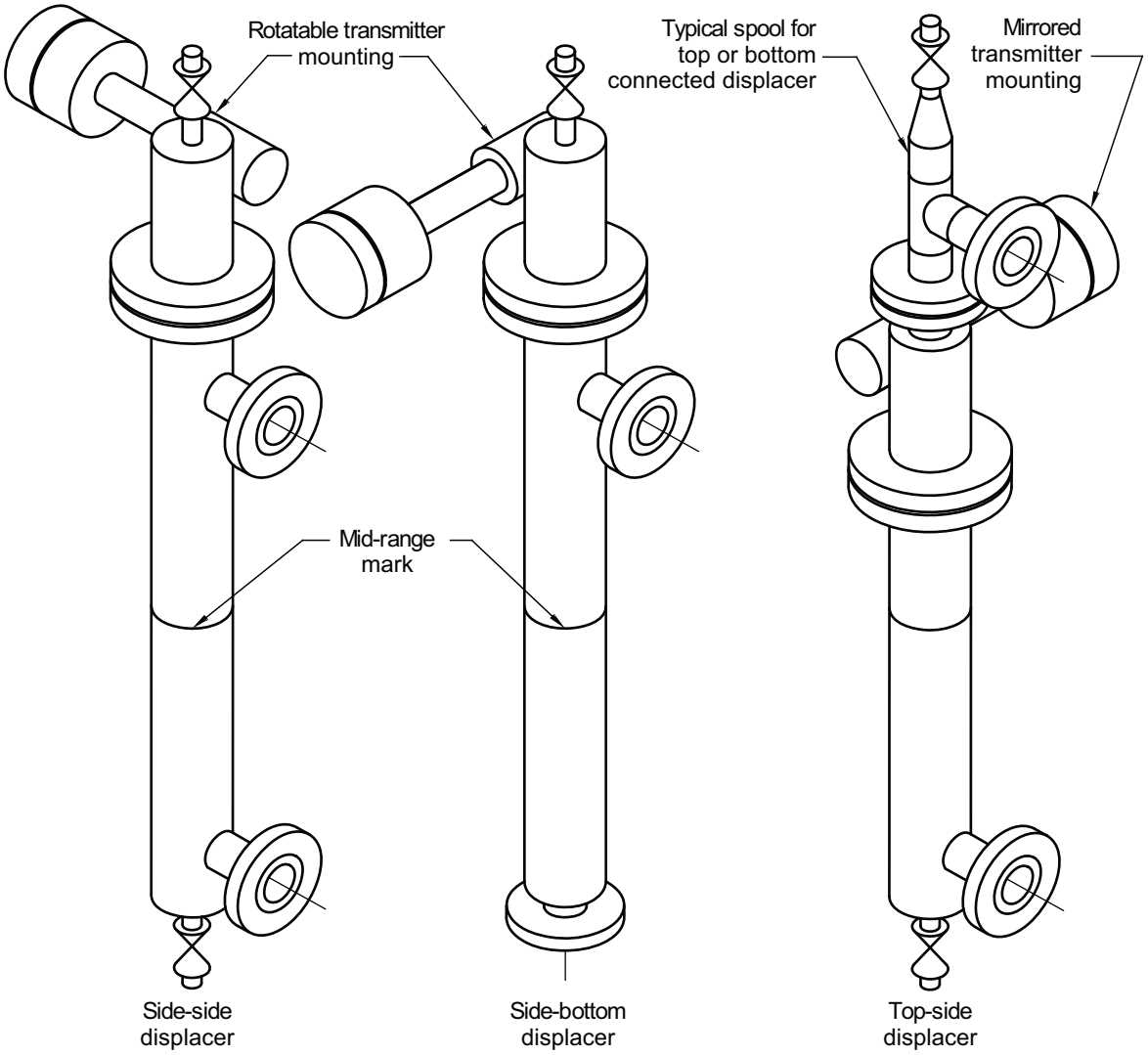

Figure 31—Displacer Transmitter Mounting

For in-place or bench calibration, either process fluid or water is used. When water is used, the liquid levels used for calibration should be adjusted by multiplying them by the fluid specific gravity.

The arrangement in Figure 32 permits in-place calibration. This is done by operating the valves so that the liquid level is changed in the direct reading level indicator and the displacer together.

Clear plastic tubing and water can be used for calibration when the displacer is directly connected to the vessel. Block, drain, and vent valves are also needed to fill and empty the chamber during the calibration process.

7.3.3.5 Disadvantages

If the chamber's temperature is significantly higher than when the calibration was performed, the torque tube's modulus of rigidity is less and this results in a low reading. Compensation for the temperature difference can be made during calibration, but if the temperature changes, the error re-occurs.

Also, a displacer is a motion balance instrument so, besides the loss of torque tube rigidity, the movement of the displacer itself is a source of systematic error. Some suppliers have developed methods that compensate for these changes. On the other hand, some displacers are equipped with temperature and other forms of electronic compensation that can deal with many of these issues.

Provided by : www.spic.ir

--`,,`````,,,`,,,

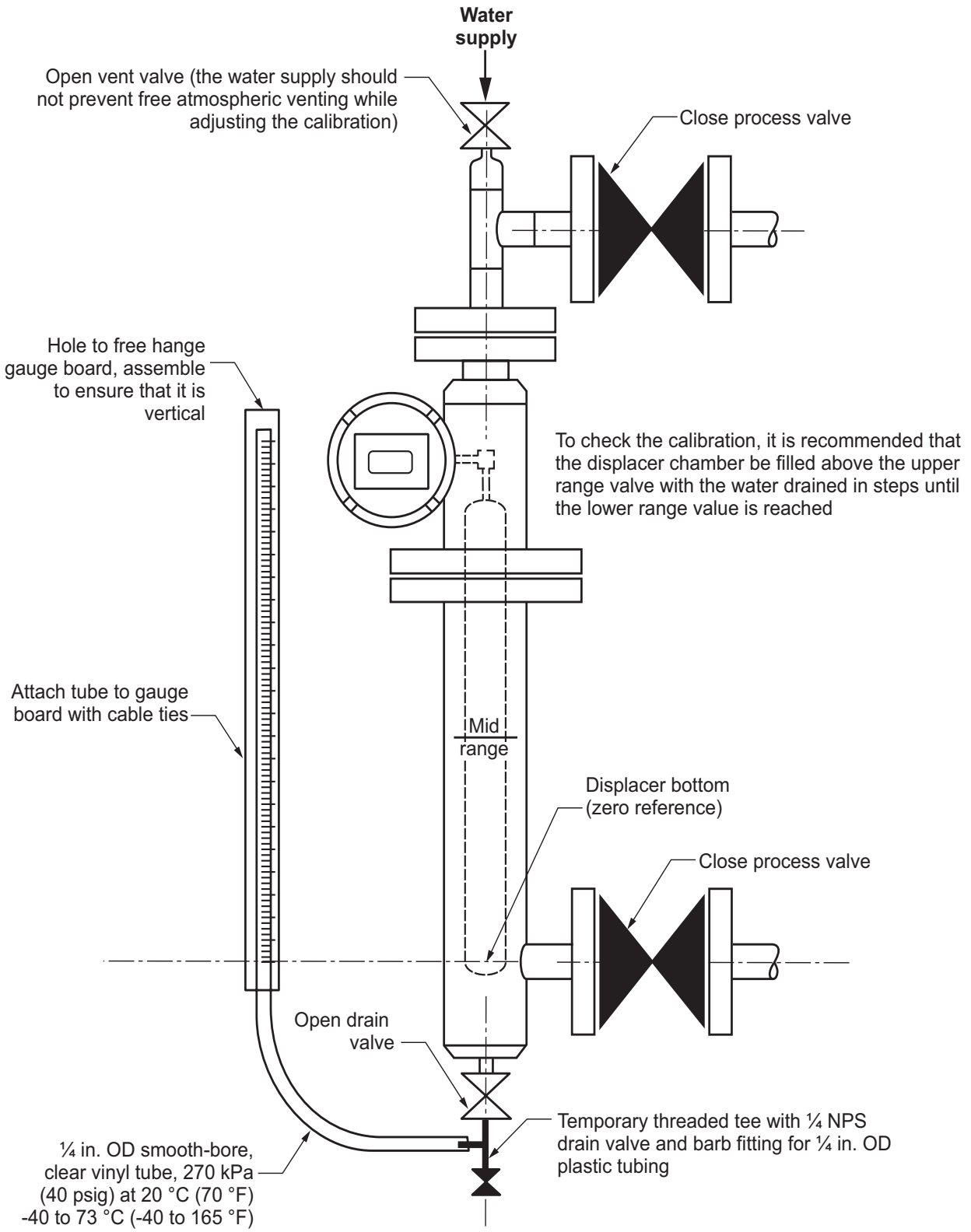

Figure 32—Arrangement for a Displacer Wet Calibration

Provided by : www.spic.ir

Copyright American Petroleum Institute

The displacer reads level based upon liquid density similar to a differential pressure transmitter. If the fluid in the vessel has a lower specific gravity than the instruments calibration basis then the reading is lower than the actual level. See 7.5.3.4 concerning this issue.

Viscous material can cling to the displacer and affect its calibration. Liquid coatings below the liquid level with the same specific gravity as the liquid have no effect. However, coatings above the liquid level or heavier trace material coating anywhere on the displacer can cause the instrument to read high.

A polymer matrix formed from asphaltenes and other olefin containing fluids can deposit on the displacer. This material eventually bridges the gap between the chamber and the displacer element causing the instrument to not respond. These compounds are common in hydrotreaters, hydro crackers, delayed cokers, and fluid catalytic crackers. In these cases a continuous liquid purge and tracing should be considered.

In coking and other dirty applications, solids formation on the knife edge bearing and displacer rod ball joint can increase hysteresis. It could be necessary to introduce a steam or flushing oil purge into the end of the torque tube arm to keep the chamber clean, the shaft free, and the torque tube in a suitable condition.

With volatile liquids, a thermo-siphon can be set up between the chamber and the vessel. Condensation or vaporization can occur in the chamber due to temperature differences between it and the vessel. For instance when steam stripping is used, the steam can condense at the top of the displacer causing condensate to circulate through the chamber. The denser condensate backs up into the chamber causing a high reading.

The displacer mass and the torque tube are a spring mass system with a low excitation frequency. A series of rising and falling levels can provide enough energy to cause the displacer to vibrate at its natural frequency. This could lead to an oscillating system. Even a single pulse could excite the system for an extended period, creating magnified signal noise and leading to an eventual fatigue failure of the torque tube.

Other services where resonances can occur are agitated vessels, blowdown drums, or vessels with violent boiling or vaporization. Coke drum structures and similar facilities which tend to vibrate also can excite a displacer. With a small vessel and a high controller gain it is possible to create an under damped run away control circuit. Some displacers have a liquid damping orifice in the lower equalizing connection that helps stability. This is particularly helpful with small vessels that have time constants that are the same order of magnitude as the displacer chamber.

The displacer chamber should be vertically plumb so that the element does not rub the side of the chamber. The longer the unit the more vertical it needs to be. A 9.5 mm ($^3/_8$ in.) clearance is recommended. Further, the entire length of the displacer needs to be accessible for cleaning and calibration checks.

The major advantage of hydrostatic pressure transmitters over displacers is they react faster to changes and need less range for stable control. Differential transmitters are not prone to excitation. A transmitter diaphragm does not experience fatigue failure unlike a displacer where hydraulic resonances can cause a torque tube failure.

In summary, for most applications differential pressure transmitters are preferred over displacers because they are more economical and require less maintenance. A standard differential pressure transmitter is more flexible in that it is not confined to a fixed tap distance and does not need factory modifications to perform the same functions as a displacer.

7.3.4 Nuclear

7.3.4.1 General

Nuclear level gauges operate by transmitting Gamma particles from a nuclear source to a detector. The radiation that is not absorbed by the material in the vessel or vessel walls is picked up by the detector.

Provided by : www.spic.ir

Copyright American Petroleum Institute

Nuclear level instruments are used where other instruments do not operate well; e.g. solids silos, FCCU's, coking, or vacuum towers. They also have the advantage of being able to measure the vessel level below the tangent line down to the knuckle radius.

Nuclear level gauges operate in the same manner as a differential level transmitter. The more material or the denser it is, the higher the apparent level. The amount of Gamma radiation absorbed is related to the material quantity and its density. The detected radiation is inversely related to the material in the vessel. Figure 33 shows a typical installation.

Nuclear devices can be difficult to accurately calibrate. For vessels with a complicated geometry and internals, training the instrument might be necessary. To obtain the desired accuracy it could be necessary to fill or empty the vessel using water and a differential level transmitter.

Nuclear level gauges are affected by the vapor density but the ratio of vapor density in the upper phase to the liquid density is such that this is typically not needed.

Nuclear level sensors react to nearly all Gamma radiation, including quality assurance X-raying of welds. While testing occurs the affected instrumentation should be secured or otherwise protected.

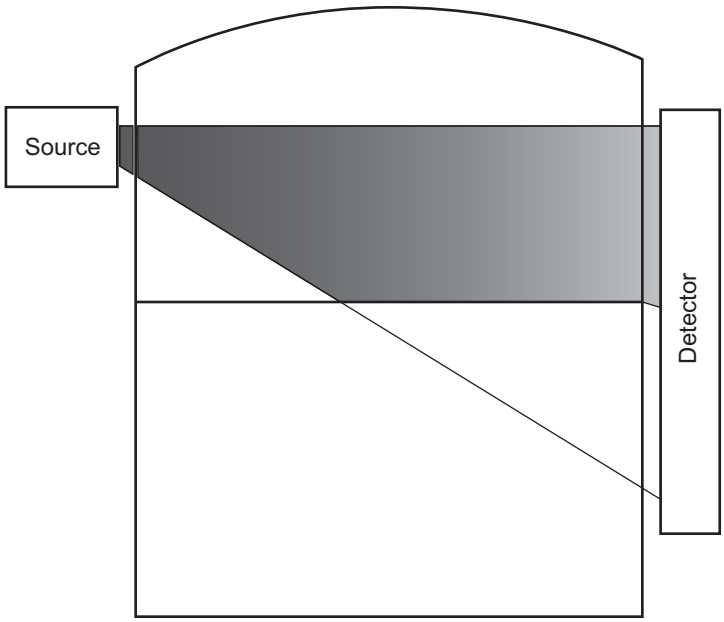

Figure 33—Nuclear Level Transmitter

7.3.4.2 Types of Detectors

7.3.4.2.1 Scintillation Detectors

There are two principal types of detectors: scintillation crystals and ion chambers. Table 13 provides a comparison of these detectors. Scintillation detectors are digital devices that count individual Gamma particles. Scintillation detectors have become the preferred device. Since they are more sensitive they require a smaller source. Once robust, long life photomultiplier tubes (PMT) became available scintillation detectors reliability were found acceptable.

Scintillation detectors use less electrical power. This allows the use of 24 VDC power. Nevertheless, internally a high voltage is created so low energy electrical hazard certifications are not available but they qualify as non-sparking devices, so explosion proof installations are not required.

Provided by : www.spic.ir

Copyright American Petroleum Institute

Table 13—Comparison of Nuclear Detectors

	PVT Scintillation	Ion Chamber	NaI Scintillation
Robust	Moderately*	Yes	No
Efficiency	>90 %	5 % to 7 %	>90 %
Operating Radiation Level	0.05 to 10 mR/hr	2 to 50 mR/hr	0.05 to 5 mR/hr
Typical Source Sizes	To 200 mCi	10 to 2000 mCi	To 100 mCi
Max Temperature	48.9 °C (120 °F)	71.1 °C (160 °F)	37.8 °C (100 °F)
* Ruggedized well-logging PMT are available to operate with higher operating temperature are a potential option.			

There are numerous scintillation compounds, which emit photons when hit by a Gamma particle. For industrial uses, the most common are aromatic compounds, such as anthracene ($C_{14}H_{10}$), that are suspended in a solvent that in turn is polymerized to form a solid plastic such as polyvinyltoluene (PVT).

Sodium Iodide (NaI) may be used when a greater sensitivity is needed. It is heavier than PVT, its S.G. is 3.67 while PVT has a S.G. of 1.25, and is mildly hazardous. The latter is outweighed by a significant reduction in the source size. However, it is affected by moisture and has some temperature sensitivity, so sensor heaters might be required. Also, Sodium Iodide crystals are slower responding than PVT crystals.

The maximum count rate is determined by the frequency response of the photon detector. Photon detectors can be either a charge-coupled device (CCD) or a photomultiplier tube (PMT.) The photomultiplier is less noise prone and has a faster response and is the preferred device for nuclear gauging.

The photo multiplier and crystal are aligned for optimum photon capture. As a result if any part of a scintillation detector is defective the entire sensor needs replacement.

Scintillation detectors are available in lightweight bendable forms. Two 3050 mm (10 ft) ion detectors weigh 160 Kg (350 lb) while a single flexible system weighs less than 18 Kg (40 lb.) Being bendable reduces the installation effort and allows flexible positioning of the sensor. However, they are less efficient, so source sizes can be significantly larger than systems that use rigid scintillation detectors.

7.3.4.2.2 Ion Chambers

Ion chambers are the original nuclear detector. They are easy to fabricate and they can be provided in long lengths. They are metal tubes with a conductor through the center. The tube acts as cathode while the wire is anode. The tube is pressurized with an inert gas, usually argon.

The ion chamber becomes an energy cell as Gamma radiation strikes the gas in the cathode tube. When the radiation hits the molecules, electrons are given up. The electrons migrate to the anode wire. The current flow is proportional to the radiation intensity which is expressed as mSv/hr (mRem/hr). Even with the strongest radiation only pico-amps are generated so amplification is necessary.

Ion chambers use one or more 500 watt heater blankets for thermal stabilization. Typically, the electronic section is maintained on backed up power while the heater is not. There is enough heat retained by the enclosure to provide a usable signal for 30 minutes.

An ion chamber remains the most robust sensor. Since ALARA (As Low as Reasonably Achievable) regulations are targeting occupational doses of less than100 mRem/yr (1 mSv/yr), new applications using ion chambers tend to be justified only under special circumstances.

Provided by : www.spic.ir

Copyright American Petroleum Institute

7.3.4.2.3 Geiger-Müller

Geiger-Müller tubes are used for point level applications. Placing tubes in parallel increases their sensitivity. However they age and require 400 volts to 600 volts. They can be provided with a diagnostic contact to activate on tube or calibration failure. See 7.4 concerning the application of level switches.

7.3.4.2.4 Nuclear Interface Scanners

A nuclear interface scanner solves the problem of accurately detecting and measuring absolute level, interfaces, densities, and product profiles. It can detect a single interface or report the position of an emulsion layer. Interfaces can be detected between liquids, solids, foams, and the vapor space. Typically, the density is repeatable to ±0.005 S.G. and the level is measured within 12 mm ($^1/_2$ in.). They are used with amine absorbers to detect the rag layers and HF Alkylation units to separate the acid, emulsion and gasoline layers.

The system consists of a low energy gamma emitting source, a detector and a digital processor. The source and detector mounting depends on the vessel shape and size. Dual dry wells are inserted into the vessel or less commonly besides it. A servo motor moves the source and sensor together inside the wells. The source and detector are positioned so that the gamma energy passes from the source through the process to the detector. The amount of gamma energy reaching the detector is inversely proportional to the density. This information is used to create a density profile or indicate the position of an interface. The former requires a two axis display while the latter is transmitted as a simple analog signal.

Another type of nuclear interface scanner uses a series of Geiger Muller tubes in one dip tube and a series of Americium-241 sources in another. The dip tubes are fabricated from Titanium because it is transparent to the low energy 60KeV radiation emitted from an Americium-241 source.

The liquid between the two dip pipes attenuates the radiation. The radiation measured by the Geiger Muller tube is related to the density of the intervening material. Each tube produces a voltage pulse train. The rate at which these pulses are produced is proportional to the radiation level.

7.3.4.2.5 Neutron Backscatter

Hydrogen bulk density is measured by the detection of neutrons. A 100mCi AmBe source emits high energy, fast neutrons. Neutrons interact weakly with atoms but since they are similar in size they do interact with hydrogen atoms. Consequently, hydrogen interaction accounts for the highest proportion of the collisions. The more hydrogen atoms present the more collisions.

As a neutron collides with an atom, it loses energy and it becomes a slow or thermal neutron, which is easier to detect than a fast neutron. After a collision the slow neutrons scatter but some travel backwards towards a He-3 filled ion detector. Slow neutrons can only travel about 460 mm (18 in.). So, just the volume immediately front of the detector, that is in the shape of a horizontal tear drop, is measured.

Any hydrogenous material is measured including, water, hydrocarbons, acids, bases, and organic liquids. It is sensitive to $\pm 2.6 \times 10^{-4}$ g/cm³ of hydrogen. Vapor, with a low hydrogen density, has few neutrons reflected back to the detector. Hydrocarbons and water have a larger hydrogen concentration so more neutrons are reflected. It can accurately detect light, medium and heavy foam as well as wet and dry coke.

7.3.4.3 Types of Sources

Radioisotopes decay to a more stable form by emitting quantum particles and electromagnetic waves. More than 900 radioactive isotopes have been identified. Most of these are man-made in reactors and particle accelerators. Only three; Cesium-137, Cobalt-60, and Americium-241 are used for nuclear gauging in the refining and petrochemical industries. See Table 14 showing the half-life of these Isotopes.

Provided by : www.spic.ir

Copyright American Petroleum Institute

Table 14—Types of Isotopes

Isotope	Half Life	Energy
Cs-137	30	0.660
Co-60	5.5	1.250
Am-241	455	0.066

Cesium-137 is by far the most widely used of the three. It has a long half-life so sources can be provided for periods over a decade and the Gamma particles have enough energy to penetrate heavy walled vessels without significant attenuation. It is a liquid metal in its raw form so it's combined with chlorine to form CsCl salt. In this form, it's a soluble powder similar to table salt. To protect the water supply the cesium is mixed with an inert ceramic that is formed into a pellet.

The pellet is packaged in a dual stainless steel capsule that is sealed using a tungsten inert gas welding process. This high integrity encapsulation has been provided for over thirty years in downhole well logging without causing contamination.

Cobalt-60 is commonly used for industrial radiographs, steel mills, food irradiators, and medical applications. Less Cobalt is needed, particularly as the wall thickness increases, but due to its short half-life together with the development of dual hermetically sealed packaging for Cesium it has all but ceased to be used in the refining industry. Most source holders are rated for both isotopes, but it is not unusual for the holder's Cobalt mCi rating to be one tenth of its Cesium rating. Its unique advantage lies in its depth of penetration, which enables measurement over large distances or through thick vessel walls.

Americium-241 is source of alpha particles but its penetrating power is limited due to its low energy. It use is limited to smoke detectors, neutron backscatter measurements and the like.

Regardless of the source type, its energy level decays with time so compensation is needed. This is accomplished by providing an algorithm that models the source decay and adjusts the detector sensitivity accordingly.

7.3.4.4 Source Holders

The source holder is the most critical factor in the application of nuclear gauging systems and is the focus of the health and safety regulations, such as HPS N43.8. They are designed to the applicable portions of IEC 62598 and ANSI N43.8. The radioactive material is enclosed in a hermetically sealed stainless capsule that is fabricated to an appropriate level of performance according to HPS N43.6 or ISO 2919.

The source holders should be able to withstand fire and physical damage. It should attenuate the radiation to the surrounding area to acceptable levels. It also acts as the "lens" for focusing the Gamma radiation onto the detectors. Lastly, it serves as the shipping container from the supplier.

The holder consists of the following:

— shielding material;

— shutter mechanism;

— locking handle;

— collimator;

— radiation capsule.

Provided by : www.spic.ir

--`,,`````,,,,`,,,,`,,,`,,,,,,,,,,,,,,-`-`,,`,,`,`,,`---

Copyright American Petroleum Institute

The shutter mechanism can be equipped with actuators and limit switches. These are used when routine access in front of the detector is needed and are rarely necessary in a refinery. The use of shutter actuators can complicate licensing and could cause the source to require a specific license. Interlock keys can also be used to facilitate confided space entry but have the same potential issues as an actuator.

Various shielding materials are used with cast iron often being preferred for its fire resistance. However, lead is needed for the larger sources. Lead source containers also have the advantage of being lighter and can provide tighter and crisper source collimation. Source holders can weigh up to 340 kg (750 lbs) but more typical is a source holder rated for 1000 mCi weighing 59 kg (130 lbs).

The source horizontal collimation angle can be up to 12° and small as 4°, the vertical collimation angle typically is 45° but in some instances by placing the source across from the middle part of the detector angles greater than 60° are possible.

Strip sources are also available. These typically are sold in lengths between 610 mm to 1220 mm (2 ft to 4 ft) and are stacked to achieve the necessary length. They weigh up to 770 kg (1700 lbs) and are 610 mm (2 ft) wide.

Shutter mechanisms are used when the source needs to move or when vessel entry is needed. They need to have a locking handle. To be able to open and close the shutter requires a certification. If necessary, the shutter mechanism should be protected from freezing rain.

The initial shutter opening is accomplished by a technician holding a “specific license” to perform this function for the device. Also, prior to moving a source a technician with a “specific license” closes and locks the source.

7.3.4.5 Source Sizing

The measurement range is dependent on the source size. The strength of the radiation sensed by the detector depends on the density and thickness of the material in the vessel, the distance between the source and the detector plus the vessel wall thickness and its insulation.

Multiple sources are often needed to measure wide ranges. Collimation angles are typically 45° so the maximum range that can be measured with a single source is equal to the diameter of the vessel. Further, radiation attenuation becomes a factor when large diameter vessels are involved. To compensate for the attenuation, sources are overlapped.

Conversely, multiple detectors can be used with one source. For instance, a vapor density compensation detector could be combined with a level transmitter or multiple point detectors could be used to detect foam.

From an absolute measurement perspective, the more Gamma particles received, the better the result. They do not arrive in a steady stream. The creation of Gamma particles is a statistical process. For a given source size, decreasing the measurement response time lowers accuracy. Further, accuracy tends to decrease with rising level.

There are several conflicting priorities in source sizing.

a) Provide a long operational life.

b) Provide maximum measurement accuracy.

c) Provide a fast response to changes.

d) Provide a stable measurement.

e) Minimize worker exposure.

Provided by : www.spic.ir

Copyright American Petroleum Institute

f) Minimize the administrative burden and fees.

g) Minimize the number of sources.

h) Minimize the number of detectors.

Larger sources promote a longer operational life and minimize their quantity. They also help with stability by improving the signal to noise ratio when the vessel is full but increases the worker exposure. Accuracy is improved and response time by increasing the number of counts.

However, sensor saturation can occur with empty vessels. This can be corrected by using more, smaller sources. Additional sources make the overall field strength more uniform and the total radiation energy is less. They can also reduce the uncorrected systematic error.

Source reduction can be accomplished by using larger detectors (i.e. increasing the cross sectional area of the Scintillation crystal) or more sensitive detectors (e.g. NaI Scintillation detectors). However, the sensor frequency response needs to be improved or sensor saturation occurs sooner. This reduces the maximum length of the sensor. Installing parallel detectors is also an option to increase sensitivity.

The absolute limit on source sizing is determined by worker life time exposure of 2.5 mSv (250 Rems). The rule for sizing a source limits the exposure to ≤0.05mSv/hr (≤5 mR/hr) at 300 mm (12 in.) from the source or on the detector side the point nearest to the source. NCRP (National Council on Radiation Protection and Measurements) recommends an annual limit of 50 mSv for worker exposure. While ALARA (As Low as Reasonably Achievable) programs are targeting 1 mSv/yr. Engineering controls (e.g. barriers) can be employed for particularly difficult measurements or large sources.

Conversely, the life of the installation should be a major factor in the final source size. Properly sized Cesium sources should provide a minimum of fifteen years of service life without sacrificing response time.

7.3.4.6 Licensing

The design of the source container, the size and location of the source, and the source's handling should comply with local, state, and federal requirements. Nuclear gauging is mostly regulated by Agreement States. These are states that have consented to follow the protocols of the (National Regulatory Commission (NRC). The NRC maintains a web site listing the Agreement States and links to their regulations. In the few non-agreement states, the NRC provides direct regulation.

There are three authority levels applicable to sources in nuclear gauging. Table 15 outlines these levels. For Cs-137 sources, a General License is most often needed. Special Licenses are needed when special circumstances apply such as an unusual application or an especially strong source.

Most of the nuclear gauge sources used in the petrochemical industry only require a General License.

There is no license application by the end user according to the NRC for a source that has a general license. A general license is a de facto license based on the possession of a generally licensed device. Rather, it's the manufacturer's responsibility to report to the authority having jurisdiction, the name, device, strength, etc.

However, the NRC and the some Agreement States have increased their monitoring by following up with the end users to determine the extent of material they possess. Furthermore, several Agreement States have tightened the registration (e.g. Louisiana) which requires pre-licensing before the source is allowed in a facility. Other states are requiring an application within a fixed period (e.g. thirty days) after acquisition of a source. Further, annual reporting is mandated by some states. In the non-agreement states, the NRC now requires annual documentation that the list sources and locations. There are fees for processing these documents as well.

Provided by : www.spic.ir

Copyright American Petroleum Institute

Table 15—Nuclear Regulations by Source Size

Activities	General License	Specific License	Low Activity Source
1. Licensing	The owner is not involved with the governing authority unless otherwise mandated to make an application.	The owner has to have a specifically license to receive the source. A fee is paid to the governing authority.	The owner is not involved with the governing authority unless otherwise mandated to make an application.
2. Shipment	The owner designated representative takes ordinary delivery.	The owner has to furnish a copy of his license to supplier prior to shipment.	The owner receives an ordinary delivery.
3. Installation/ Startup	The owner can mount the source. Specifically licensed personnel are needed for startup. The supplier trains owner personnel.	Specifically licensed personnel are needed for installation and startup. The supplier trains owner personnel.	The owner can perform startup. No specifically licensed personnel are needed.
4. Relocation	Internally relocating source by specifically licensed personnel. Informs the governing authority.	The owner has to inform the governing authority to relocate source and use specifically licensed personnel.	The owner can perform relocation without supervision.
5. Inspection	Semi-annual shutter test and wipe test as specified, with a max of three years.	Operational and integrity tests as specified in license.	None needed.
6. Records	The owner maintains records as mandated by the governing authority.	The owner maintains records as mandated by their license.	The owner keeps an inventory of the sources.

For public health reasons ALARA regulations are being mandated by some states to ensure small sources. The NRC is harmonizing its regulations to comply with the IAEA (International Atomic Energy Agency) Code of Conduct. To limit the amount of potential nuclear waste, the NRC is reducing the size of sources that will be covered by a General License to 270 mCi of Cesium and 81 mCi for Cobalt.

Although the proposed amendment only involves changes to Title 10, Part 31, of the *Code of Federal Regulations* (10 *CFR* Part 31), existing general licensees that become specific licensees would need to comply with the NRC's regulations for specific licensees, such as those in 10 *CFR* Part 19, Part 20 and Part 30. This would include developing a radiation protection program, according to 10 *CFR* 20.1101.

The proposed changes also allows the Agreement States to require specific licensing for sources containing less material than the limits imposed for NRC licensees

Currently facilities involved in nuclear gauging from fixed sources do not require special access controls. The limit at one location (i.e. room or storage locker) is 30 Cu before special security and work protections are needed. These rules are mostly intended for Nuclear medicine and irradiators.

Internationally, the regulation of nuclear gauging varies but usually the use of gauges is handled on a case-by-case basis by the local security and health authorities which grant the import license. Local agents that specialize in the importation of medical and other isotopes are the most effective means for handling the shipment and owner licensing of sources.

Further, the source holder design might have to meet ISO 2919, *Radioactive Protection—Sealed Radioactive Sources—General Requirements and Classification*. For instance, Canadian regulations require that source holder handling be performed by trained individuals and authorized by a license.

Provided by : www.spic.ir

Copyright American Petroleum Institute

By using low activity sources, nuclear gauging (e.g. density measurement) can be accomplished without most of the requirements that apply to a General License. These sources are totally sealed without a shutter so a Specific License holder is not needed to commission the source. No wipe tests are needed and the source can be relocated by the owner.

7.3.4.7 Installation

Nuclear instruments are installed according to the supplier's instructions and nuclear regulations. Further, detectors should be located to avoid Gamma particles from other sources. Detectors should not be mounted next to unrelated sources and not be in the path of sources on adjacent vessels. The source horizontal and vertical collimation angles should be used to determine the zone of influence.

7.3.4.8 Operation

The facilities need a radiation safety officer (RSO) that is familiar with the regulatory requirements and safety procedures. The facility requires a Specific Licensed individual for the source to install, relocate, or service it. Otherwise, the supplier or another Specific License holder has to be involved.

The following are guidelines for a General Licensee on maintaining sources.

1) Labels on the source are not to be removed and are to be kept legible.

2) Only a Specific Licensed holder for the source initially opens the shutter.

3) Service, including source removal, is by a Specific License holder.

4) The RSO has to perform a shutter test every six months. The RSO performs source integrity tests (e.g. wipe tests) at intervals determined by the registration certificate.

5) Tests and servicing records, as well as the record of receipt, user training, serial and model numbers of the source and shield, plus any certificates are maintained by the RSO and are retained for three years after source disposal.

6) The shutter is closed or retracted and locked by the RSO prior to entry into equipment that has a nuclear source.

7) Retired sources should be transferred within a two year period to the supplier or others licensed for this purpose. Prior written consent from the governing authority is also necessary. The supplier should be informed as well so their records can be maintained.

8) In an accident (e.g. fire) assistance should be immediately obtain from the supplier or others licensed for this purpose. In case of theft or loss of radioactive material, the licensing authority should be immediately notified.

Lastly, 10 *CFR* 19.12 requires that individuals with a potential exposure greater than 100 mRem (1 mSv) be trained on the safe use of radioactive material. Operation and maintenance personnel working in the vicinity of nuclear gauges should be trained on the following:

— basic theory;

— biological effects of radiation;

— regulations;

— measurement;

Provided by : www.spic.ir

Copyright American Petroleum Institute

— and monitoring techniques;

— tests performed on devices;

— hands-on work with dosimeter and other instruments;

— emergency procedures;

— source decommissioning.

7.3.5 Ultrasonic Level

7.3.5.1 Operation

Ultrasonic transmitters create a sound wave that is reflected off a surface. It measures the elapsed time for the sound wave to cross the space to the surface. Since the speed of sound through the medium above the surface is known, the time from signal transmission to reception is proportional to the level.

Ultrasonic transmitters are effective for waste water tanks, sumps, and other low vapor pressure applications where the vapor composition and pressure remains constant. For non-enclosed or open tanks, ultrasonics have the advantage that, unlike non-contact radars, they are free of FCC regulations. They are also useful for low dielectric fluids ≤1.9 where radar is not as effective. However, other than a few low vapor pressure hydrocarbons (e.g. Kerosene) few components meet both these conditions.

There are ultrasonic level transmitters that operate from the bottom of the vessel. These devices do not require a tap and are not affected by vapor changes. Rather, they need a constant composition fluid to provide the correct reading. They have applicability with toxic and other highly hazardous fluids. Some versions of this device have been able to work with an interface and can detect both the true level and the interface.

7.3.5.2 Precautions

Ultrasonic technology needs a careful review to ensure correct application. The speed of sound varies with process pressure and temperature, relative humidity, and vapor composition. Temperature compensation is a standard feature. In general, non-contact radar has fewer limitations. The ultrasonic transmitter should also be equipped with software for eliminating false echoes.

7.3.6 RF Capacitance/Admittance

7.3.6.1 General

RF capacitance/admittance level transmitters should be considered for high temperature and pressure services. Bare probes can operate at pressures as high as 68.9 MPa (10,000 psig) and process temperatures between –275 °C to 815 °C (–460 °F to 1500 °F).

A capacitance level transmitter consists of a sensing probe that is inserted into the vessel or bridle. Figure 34 shows the various arrangements. It operates with both liquid and granular materials. The probe can be either bare metal or metal insulated with a sheath.

The frequencies for these devices range from 30 kHz to 1.0 M hertz and materials with dielectrics as low as 1.1 can be sensed.

Provided by : www.spic.ir

--`,,```,,,,````-`-`,,`,,`,`,,`---

Copyright American Petroleum Institute

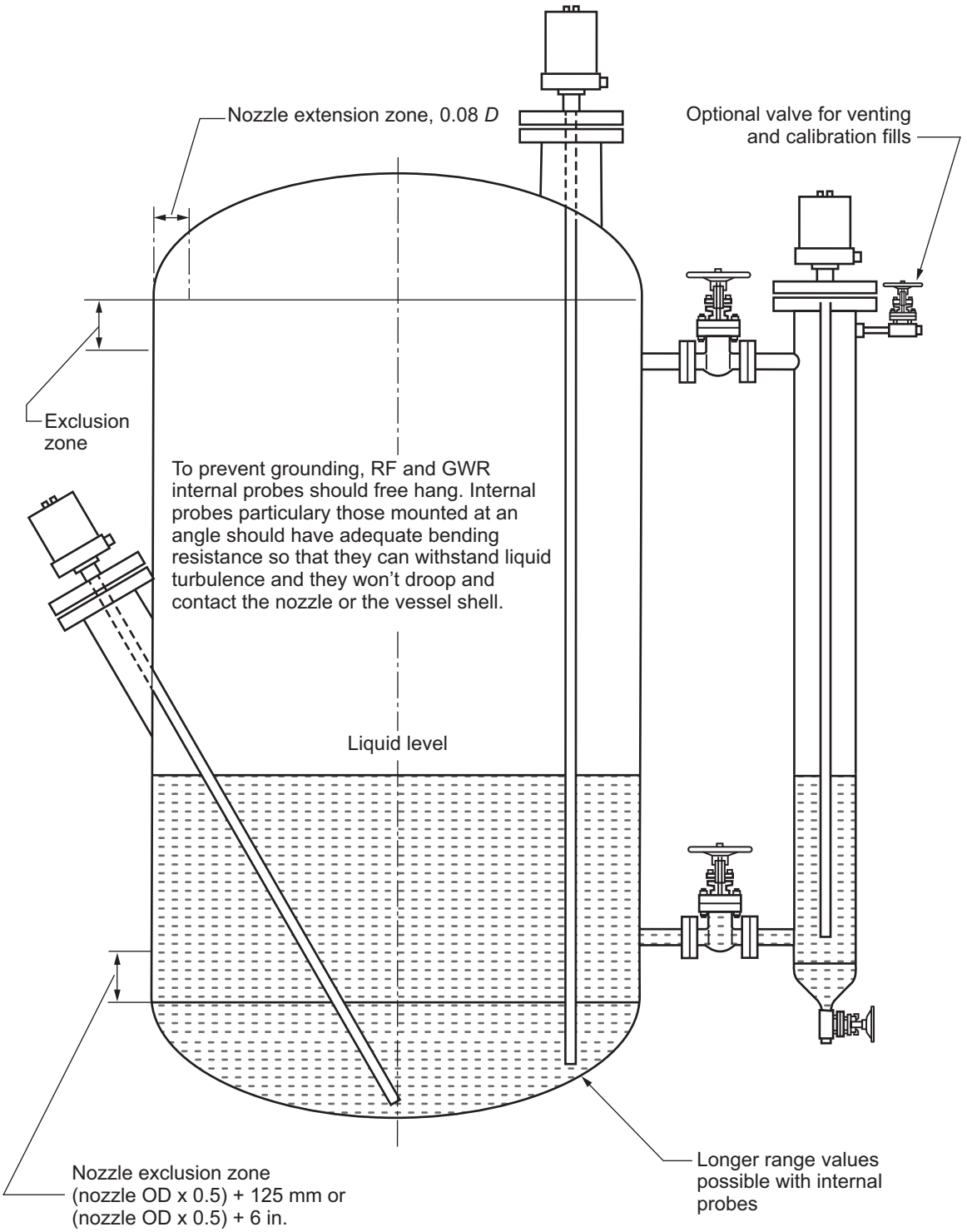

Figure 34—RF Capacitance/Admittance or GWR Level Transmitter Mounting

Provided by : www.spic.ir

Copyright American Petroleum Institute

7.3.6.2 Non-Conductive Liquids

If the vessel is an electrical conductor and the material being measured is an insulator (e.g. a hydrocarbon), a bare probe is normally used with the vessel serving as the other capacitor plate. Since the material's dielectric is different from the vapor being displaced, the capacitance between the probe and wall varies with level.

However, this measurement is affected by dielectric shifts due to changes in material composition, which can result in significant errors.

The shape of the vessel also affects this measurement. For a liquid measurement in a vertical cylinder the span can be calculated. Otherwise, the transmitter needs a capacitance profile to linearize the signal. This is typically developed by slowly filling the vessel with the process fluid. Capacitance/RF probes are difficult to calibrate without having the correct dielectric material available. To avoid this problem coaxial probes or stilling wells are often used, but a low viscosity and clean process fluid is recommended.

Coaxial probes or stilling wells are also recommended for large plastic tanks to overcome low gains. This also provides the necessary ground reference. Low dielectric fluids (e.g. hydrocarbons) have low gains that could also need a coaxial probe or a stilling well. Coaxial probes or stilling wells are recommended for metal tanks greater than 6 m (20 ft) in diameter. When this is not practical, mounting the probe closer to the wall can improve the gain.

A bare probe should not contact conductive liquids, e.g. water. If this happens, the output is driven to a full scale reading. Similarly the probe should not contact the vessel wall.

A problem with measuring hydrocarbons is that the dielectric decreases between 0.0013 % and 0.05 % per degree Celsius. The density of the oil influences the dielectric constant. A smaller number of molecules per unit volume means there is less interaction with the electric fields and consequently a dielectric decrease. As the temperature increases, the density decreases so the dielectric decreases.

7.3.6.3 Conductive Liquids

If the material being measured is an electrical conductor that is ≥20 micro Siemens/cm, an insulated probe is used. The probe serves as one plate, the sheath serves as the insulator, and the material is the other plate. The size of the capacitor plate varies with level and consequently, its capacitance varies linearly regardless of the vessel shape.

As long as the liquid remains conductive (i.e. less than 10 micro mho/cm) the capacitance level measurement is not affected by dielectric shifts, so this tends to be a more reliable measurement.

The probe is insulated with a material with a high resistivity; e.g. PVDF, TFE or a Ceramic. PVDF maximizes the capacitance (i.e. has a high gain), but its operating temperature is limited to 93 °C (200 °F). TFE is acceptable to 205 °C (400 °F) and has better corrosion resistance.

Ceramic probes are able to operate up to 790 °C (1450 °F) but have a lower gain inside vessels. However, the gain is comparable to TFE when using with a coaxial probe or a stilling well. Nevertheless, ceramics are prone to failure from rapid cooling or thermal shock.

When a liquid/liquid interface is measured and one phase is aqueous, only the water phase is measured, since the change in capacitance of the insulating phase is relatively insignificant. When emulsions occur, the instrument reads near the mid-point.

7.3.6.4 Coatings

The accuracy of RF capacitance measurements is affected by conductive material buildup on the probe surface. Low dielectric, non-conductive liquids that leave a reasonable amount of coating on the probe do not notably affect the measurement and do not require anti-coating circuits. The coating only represents a small part of the total capacitance.

Provided by : www.spic.ir

Copyright American Petroleum Institute

However, with high dielectric conductive liquids, a probe and instrument with anti-coating capability is needed. Coke fines, which are mostly carbon, are an example of a material that can create a conductive coating. Further, some conductive coatings that are barely visible (e.g. caustics or salts) require anti-coating protection.

Various methods are used to control the coating error. These include probe selection and higher frequency measurements as well as phase shifting or conductive component subtraction circuits. These techniques do not completely cancel a coating but the error is mostly eliminated.

Even so, there is a limit to the amount and type of coating that can be ignored so periodic cleaning could be necessary. In extreme cases, another technology; e.g. non-contact radar, should be considered. For instance if a conductive scale is anticipated with vessel that cannot be serviced, a capacitance level transmitter is not recommended.

7.3.6.5 Foam

Anti-coating circuits can prevent conductive foams from being measured. Conversely, by not using an anti-foam circuit it is possible to read the conductive foam to some extent. However, non-conductive foams are read based upon their density. For the most part they only bias the signal upwards slightly.

7.3.6.6 Instrument Range

The transmitter's capabilities combined with the probe's pF/m versus dielectric characteristics determines if a particular measurement can be made. When first selecting a transmitter, the minimum and maximum pF span limits should be considered. The turndown limits of continuous level transmitters vary significantly. Wider span limits allow longer measurements. Conversely, with narrower span limits shorter measurements can be made. Also, the transmitter needs zero suppression capabilities to cancel out the initial capacitance. See 3.3.3 concerning selecting instruments with zero suppression capabilities.

7.3.6.7 Probe Selection

A probe with an optimum capacitance change per unit level change pF/m (pF/in.) is essential in making a capacitance level measurement. The probe should be capable of producing sufficient capacitance change as it becomes submerged in the measured material. For probe selection capacitance/meter versus dielectric curves based upon various vessel sizes are used. Several probe types are available.

The guidelines below are useful for probe selection.

1) Use bare probes for non-conductive liquids.

2) Insulated probes are needed for conductive liquids or liquids of unknown conductance.

3) The following applications require an integral ground with the probe:

   a) measuring non-conductive fluids in horizontal vessels or other vessels where the capacitance is not linear;

   b) non-conductive liquids if the probe is too far from the vessel wall;

   c) measuring level in non-metallic vessels.

4) Since long probes are difficult to handle, flexible probes should be considered when the measurement range is greater than 3 m (10 ft).

Rigid probes are available up to 6 m (230 in.) but damage could happen during installation. Also, extra overhead clearance is needed for their removal. Regardless, for low dielectric materials ridge probes still might be necessary to obtain the necessary gain.

Provided by : www.spic.ir

Copyright American Petroleum Institute

7.3.6.8 Installation

Capacitance transmitters can either be integral with the probe or connected to the probe with a tri-axial cable. Since high frequencies are used, the cable between the probe and the electronics can become part of the measurement. In older designs the cable had to be tuned using padding capacitors or otherwise compensated.

There are circuits (e.g. driven shields) that can cancel out the cable capacitance. Also, these circuits compensate for changes in cable temperature and length. Additionally, this allows the use of longer cables.

The following additional installation recommendations apply.

a) Installation capacitance instruments should not be installed in areas with strong electrical fields e.g. motors, switch gear, electric generators, etc.

b) A dual probe with a signal return path should be used with non-metallic or lined vessels.

c) The probe should be externally grounded to the vessel.

d) To avoid material buildup, the probe should not be mounted at an upward angle.

e) If more than one capacitance probe is installed in a vessel, a minimum of 460 mm (18 in.) should be provided between the probes.

f) Probes should be located at least 460 mm (18 in.) from vessel internals.

g) The probe should not be in contact with the vessel wall or internals.

h) An RF filter on the tri-axial cable is recommended for measuring a Desalter interface level.

If walls and the medium are nonconductive, a safety ground is needed. The discharge of a static charge that occurs with the rubbing low of dielectric materials is a danger. This problem is managed by selecting an instrument that is electrically certified to prevent static discharges and is grounded where necessary.

A metal stilling well or coaxial probe are the most common means of grounding. If the liquid is too viscous for a stilling well a parallel reference rod can be provided.

For a probe in an external stilling well, the level difference from the differences in temperature is often offset by the higher dielectric of the denser liquid in the stilling well. Consequently, the indicated level is close to the actual liquid level in the vessel.

7.3.7 Guided Wave Radar

Guided Wave Radar (GWR) can be used in a variety of services and are two-wire devices. GWR transmitters are independent of most liquid properties, especially density and can tolerate a wide range of pressure and temperature conditions. They work well with boiling and turbulent liquids. Since the electronics are top mounted, it can be used with open pits or sumps.

7.3.7.1 Probes

Probes are available for a variety process conditions. Standard process seals are rated from –40 °C to 150 °C (–40 °F to 300 °F) and up to 4.00 MPa (580 psig). Higher pressure and temperature seals are available for applications up to 400 °C (750 °F) or 3.45 MPa (5000 psig). Similarly, cryogenic seals are manufactured with materials that withstand temperatures as low as –195 °C (–320 °F).

Provided by : www.spic.ir

Copyright American Petroleum Institute

Common probe configurations are the rigid rod, flexible simplex, twin lead, and coaxial. Since they work well in most applications, rigid and flexible simplex probes are preferred. Flexible simplex probes tolerate coatings better than the other types.

Rigid rods are preferred for distances less than 3 m (10 ft). Flexible probes should be used for distances greater than 3 m (10 ft) or where overhead clearance is an issue. Flexible probes should be provided with weights and spacers.

With clean liquids coaxial probes can be used to boost the signal in low dielectric applications. Also, it provides isolation from nearby objects (e.g. side taps and welds) which can cause false echoes. Conversely, coaxial rods and twin leads which can become clog are not acceptable for heavy oil and other coating services.

7.3.7.2 Level

For level applications GWR measures the time between its mounting and the surface. The GWR looks for a change in the dielectric between the vapor space and the liquid surface. For liquid level measurements, shifts in dielectric are not significant. The required dielectric change is based on the probe type and the distance. For most installations, this is less than 1.4 so the GWR works well with most liquids including hydrocarbons. Their range extends up to 50 m (165 ft).

However, dielectrics less than 1.4 need special attention. Due to their low dielectric, LPGs (especially butane) have measurement problems over long spans. Similarly, cryogenic liquids (e.g. LNG, liquid nitrogen, and liquid oxygen) have low dielectric constants. A high gain circuit or a high gain probe (e.g. coaxial) or flexible twin lead probe is needed.

For low dielectric materials over long ranges, sometimes there is little or no surface reflection. For these conditions, GWR software has been developed that uses the known length of the probe and the dielectric of the measured material to determine the level surface. A variation of this approach is used for low dielectric liquids in turbulent conditions.

Most vapors do not have a significant dielectric value so compensation is not needed. Still, for high pressures or materials with a variable dielectric the use of compensation is recommended. With pressures ≥6.90 MPa (1000 psig) the gas density is high, enough to cause its dielectric value to become significant.

7.3.7.3 Interface

For interface applications, it is best if there is a distinct difference in the dielectric between the two liquids. For normal interface applications there should a dielectric difference ≥6 with the upper surface having a dielectric ≤10 and there should be a distinct interface between the two liquids.

In interface applications the speed of travel is dependent on the dielectric of the upper liquid so unlike normal level measurement some error occurs with dielectric changes. In liquid/liquid applications a totally submerged compensating probe can be used to overcome this effect. The probes can be placed in a chamber or bridle straddling the area of interest. The upper portion of the probe is submerged in a low dielectric liquid and the lower portion of the probe is used to measure the higher dielectric lower liquid.

However, wide ranging interface measurements the probe might have to be directly mounted in the vessel. With this circumstance knowledge of one of the dielectrics is required but this is straight forward situation when one phase is water. The second reflection (i.e. the interface) is based on the time of travel through the upper liquid and is dependent on the dielectric value of the upper liquid, but knowledge of the probe length and the dielectric of the lower water phase, the upper dielectric can be determined.

The following interface measurements are not possible with a GWR:

— a thin oil layer (≤10 cm) on water;

Provided by : www.spic.ir

Copyright American Petroleum Institute

— a high dielectric liquid on top and a low dielectric liquid; such as water sitting on 1.1 S.G. Heavy Oil;

— measuring a material like sand or coke at the bottom of a vessel.

7.3.7.4 Level and Interface

Since two pulses are returned, GWR transmitters have the ability to measure the upper layer thickness rather than just the interface location. When the one layer's dialectic is relatively constant, combined level and interface applications can be made with directly inserted probes. GWR transmitters are able to measure two surfaces where a low dielectric material, like oil, is on top of a higher dielectric material, such as water.

7.3.7.5 Emulsions

Emulsion layers can exist between two pure liquids. An emulsion diminishes the GWR's measurement abilities because the layer separation is not distinct making pulse interpretation difficult. Signal hunting between the layers in an emulsion can return noisy readings.

The following should be considered when directly measuring emulsion layers.

a) If the dielectric of the top layer and the emulsion layer are similar (i.e. the dielectric difference is ≤10) then the transmitter's reading is the emulsion layers bottom since it has strongest returned pulse.

b) When the emulsion has a high dielectric, the top of the emulsion layer is interpreted as the interface.

c) If the dielectric of the bottom layer and the emulsion layer are not similar, and the difference in the dielectric constant between the top layer and the emulsion layer is ≥10, then the strongest returned pulse is the top of the emulsion layer.

d) If there is a linear dielectric transition from the top to the bottom of the emulsion, a low amplitude pulse with long wave length occurs, which is hard to pick out from the background. If the linear transition is over a long distance, there is a risk that no useful echo is reflected.

One approach with high viscosity liquids is that a rod probe be installed in an external chamber with the taps set wide enough to limit its contact with possible emulsions. Periodic inspection and draining is recommended for removing any emulsions that do manage to slip into the chamber. See Figure 34 for an example of a bridle installation.

On the other hand, when persistent thick emulsions exist, the GWR should be located in the vessel and a suitable transmitter should be used. If coatings are not an issue, it is recommended a coaxial type probe or rod probe with a stilling well be used.

A guided wave radar transmitter with a dual port enhanced circuit or specially designed high gain slotted stilling wells guided wave radar has the ability to measure emulsions. A high gain signal can measure both sides of a hydrocarbon/ water emulsion layer emulsion layer by being able to separately measure the 5 % and 90 % point of the emulsions.

7.3.7.6 Solids Measurements

The GWR works well with solids. The flexible probe can be free hanging or attached to the floor. As with liquid level measurements, the signal reflects off the surface and the distance to the surface is the measured variable. Unlike non-contacting methods, the surface angle does not impact the echo reflection. A limitation is the shear force created by the solids so tall vessels or heavy materials limit the use of GWR.

Provided by : www.spic.ir

Copyright American Petroleum Institute

7.3.7.7 Steam Applications

High pressure steam applications are difficult. Steam produces problems for the probe seals. Most elastomers have problems with steam and fused glass seals are leached by the steam so probes specifically designed for steam service should be provided.

Also, the steam dielectric value increases with pressure while the water dielectric decreases, so continuous dielectric compensation is needed. Above 18.0 MPa (2610 psig), the level cannot be measured since dielectrics of the two phases are the same.

Also end of probe measurements can be use with boiling liquids where a surface pulse is not present.

7.3.7.8 Foam and Coating Applications

Level measurements where foam occurs can often be made with GWR transmitters. GWR transmitter is low frequency device and their longer wavelength tends to penetrate foam better than the higher frequencies used with non-contact radar transmitters.

If coating forms on the probe, the returned signal is weakened. If the liquid has a high dielectric some coating is not a concern, but with low dielectric liquids coating can be a problem. A flexible simplex probe is recommended in these instances.

If a twin lead probe or a coaxial probe is used the coating can bridge between the two leads and causing false echoes that are read as level. See Table 16 for probe viscosity limits and Table 17 for typical liquid viscosities.

Also, coatings can also influence accuracy. The maximum error due to a coating is between 1.0% to 10% depending on probe type, the dielectric constant, coating thickness, and coating height above the product surface.

Table 16—Probe Types

Probe Type	Max Viscosity
Coaxial	500 cP
Twin Leads	1500 cP
Single Leads	8000 cP

Table 17—Typical Viscosities

Media	Viscosity
Water	1 cP
Heavy Oil	233 cP
Honey	10,000 cP

7.3.7.9 Configuration and Commissioning

Unlike RF admittance transmitters or Non-Contact Radar, GWR transmitters can be bench calibrated for almost any application. Figure 35 shows the various dimensions required for a bench calibration.

False target rejection is a common issue among all transit-time devices. It is necessary to have software for displaying and interpreting the echo curve. Figure 36 shows a typical echo curve. The echo curve itself includes key indicators. For example, presence of water can disrupt auto-lock circuits because a stronger peak occurs at the water level.

Provided by : www.spic.ir

Copyright American Petroleum Institute

Typical software includes graphics to clarify the input data and guides to assist with the input of the appropriate parameters for conditions such interface, solids measurement, steam dielectric compensation etc. The echo wave form screen provides information such as Level (X-axis); Signal Quality (Y-axis); Actual Echo Curve (black line); False Target Profile (red line); and Minimum Threshold (blue line). Hash marks show the location and signal quality of the target currently detected as level.

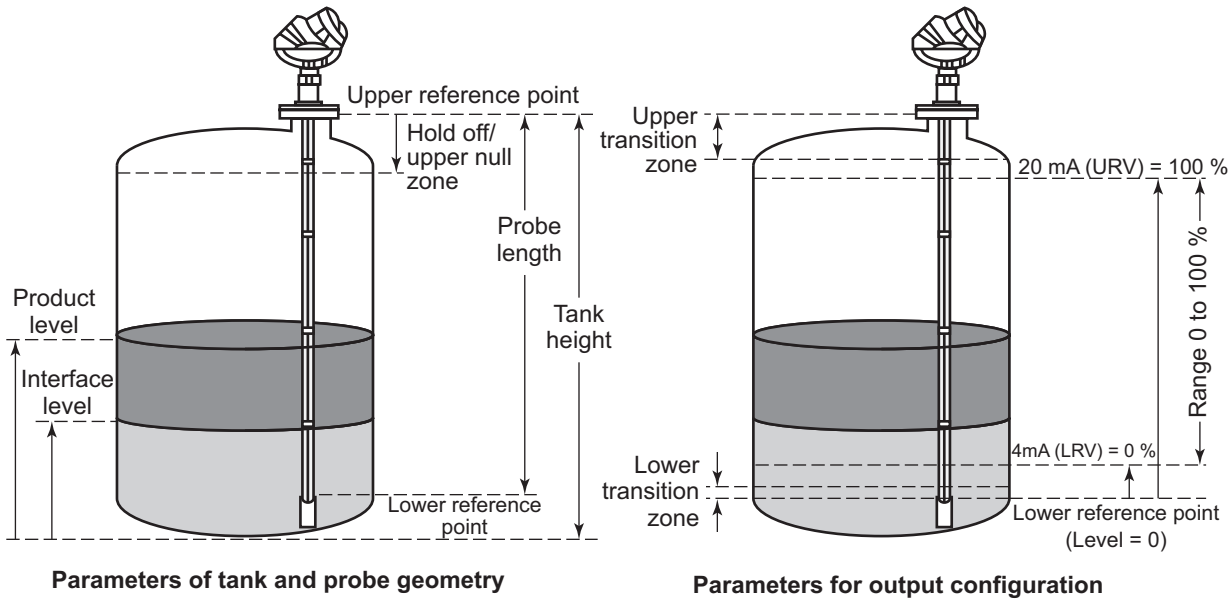

Figure 35—Critical Dimensions for GWR Installation

7.3.8 Non-Contact Radar

7.3.8.1 General

Non-contact radar is an effective technique for measuring level but it requires an informed approach. Radars operate from full vacuum to 5.62 MPa (800 psig) and –40 °C to 400 °C (–40 °F to 750 °F). Depending on the dielectric, frequency, antenna, design, etc., the maximum range runs from less than 3 m (10 ft) to more than 45 m (148 ft). It can be used for both liquids and solids. Accuracy is 0.1 % of span or better.

Non-contact radar level transmitters should be considered for the following services:

a) dirty or slurry services;

b) corrosive liquids and gases;

c) extremely viscous or coating liquids;

d) scale forming services;

e) varying density, dielectric, or conductivity occur;

f) below ground vessels and enclosed sumps.

Microwaves are reflected where there is a dielectric change. The amount of reflected energy is proportional to the dielectric of the media. Roughly, the dielectric value equals the percentage of energy that is reflected. So a dielectric of 80 means that 80 % of the emitted energy is sent back. For instance, low dielectric liquids, like butane, are hard to measure because so little energy is returned. However, the signal amplitude is not important so shifts in the dielectric are not significant.

Provided by : www.spic.ir

Copyright American Petroleum Institute

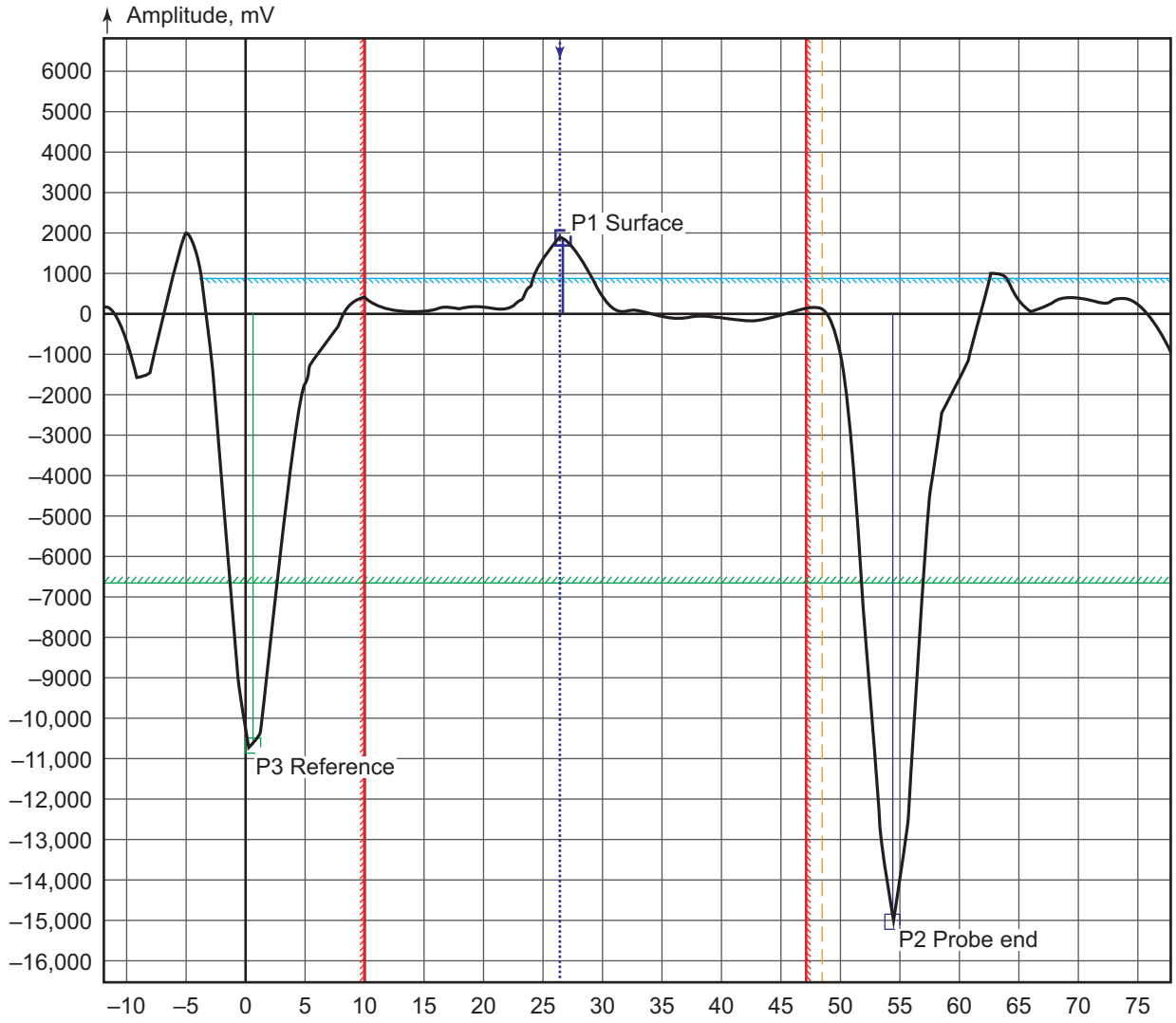

Description	Distance	Amplitude
Surface measurement	26.3 in.	
P1 Surface echo	26.5 in.	1886 mV
P2 Probe end echo	54.3 in.	–15,017 mV
P3 Reference echo	0.6 in.	–10,655 mV

Figure 36—Typical Display for Configuring a Transit Time Level Instrument

The two common technologies used for radar measurements are the pulsed and frequency modulated continuous wave (FMCW) methods. With pulsed radars the measurement is a function of the time taken for the radar signal to travel to the surface and back. An advantage of pulsed technology is that it requires less power. Consequently, most two-wire transmitters use this approach.

The advantage of FMCW radars is better accuracy especially for long range, low dielectric applications that occur with custody transfer applications.

FMCW radar emits a swept frequency with the distance calculated by the difference in frequency of emitted and received signals. Interpretation of these signals is accomplished by Fast Fourier Transforms (FFT) or similar signal

Provided by : www.spic.ir

Copyright American Petroleum Institute

processing. This algorithm requires substantial and lengthy processing. So FMCW transmitters require more power so are often externally powered devices.

Since FMCW radar uses external power, the number of samples can be increased which provides to a more robust output. For low dielectric materials this allows its use in longer range services such as a large light hydrocarbon tank or with the highly turbulent surface of a stirred reactor.

7.3.8.2 Frequencies

Process radar level transmitters operate at frequencies between 5.8 GHz and 26 GHz, but the 6 GHz, 10GHz, and 26 GHz frequencies are the more common. Frequencies are chosen for various reasons ranging from licensing considerations, component availability and technical advantage. Still, no frequency is ideally suited for every application.

Non-contact radar is not prone to outside disturbances since selected frequencies are used. Metal vessels are Faraday cages which block electromagnetic interference from entering or leaving so, typically, licensing is not an issue.

Free air applications, such as sumps, should operate with open use frequencies, such as 2.4 GHz and 5.8 GHz, which have been internationally allocated for Wi-Fi and other unlicensed purposes.

Normally, a FCC license is not necessary for radar gauges if they are used in a fully enclosed metal tank and are certified according to FCC regulation Part 15. Open air applications can be used for 5.8 and 6 GHz units without the need to obtain a license. Otherwise, a Part 90 site license would be necessary.

It should be understood that the antenna size and frequency work together. The antenna gain is proportional to the $(\text{diameter})^2 \times (\text{frequency})^2$. Larger antennas and higher frequencies (26 GHz) increase the signal gain. For a given size nozzle, a higher frequency radar provides a stronger, higher gain signal. Higher frequencies have a tighter beam angle so smaller nozzles can be used. A $1^1/_2$ in. NPS horn antenna at 26 GHz has the same beam angle as a 6 in. NPS antenna at 5.8 GHz.

The gain is also a function of the aperture efficiency. The beam angle of a small antenna at higher frequency is not necessarily as efficient as the equivalent beam angle for a lower frequency (6 GHz), large antenna radar. For instance the aperture efficiency can increase with the length and shape of the horn. Typical aperture efficiencies for level radars can range from 0.6 to 0.8.

The wavelength of 26 GHz radar is 1.15 cm versus 5.2 cm for a 5.8 GHz unit. Shorter wavelengths reflect off smaller objects, which the longer 5.8 GHz frequency tends to ignore. So low frequencies work better than higher frequencies with coatings, foam, and heavy vapors.

Higher frequency transmitters are more susceptible to signal scattering from a turbulent surface, but the higher gain tends to offset this effect so the return signal is about the same. Still, higher frequencies are more susceptible to attenuation from condensation and coating build up on the antenna. Similarly, lower frequency radars are less affected by steam, mist, and dust.

7.3.8.3 Antennas

There are three common types of antennas: the rod or stick; the cone or horn; and the parabolic. The rod type is the least sensitive and the parabolic type has the highest gain. Further, radars that use continuous wave guides are available. They are similar to guided wave radars but the signal travels inside the wave guide rather on the surface of the probe. Regardless of the antenna type, the radar design should allow complete replacement of the electronics without removing the antenna.

Provided by : www.spic.ir

Copyright American Petroleum Institute

Parabolic antennas are between 203 mm and 457 mm (8 in. and 18 in.) in diameter. They are typically used for long ranges to obtain maximum gain. They can withstand heavy surface contamination. However, they are limited to pressures below 1.00 MPa (145 psig), so they are mostly installed in solids silos, tank farms, and on marine vessels.

The advantage of a rod antenna is that it allows low frequency instruments to be in smaller openings, while maintaining the equivalent beam width and signal strength of a 4 in. NPS cone. They are particularly useful for retrofitting a radar transmitter into an existing nozzle. Rod antennas are tapered so they shed liquids. This, together with being fabricated from material, such as PTFE, it is hard for coatings to form on them. However, if coatings do form, its efficiency degrades rapidly. To avoid this they should not become submerged. Also, specially fabricated ceramic rods for high temperatures are possible.

Horn antennas are the most common antenna. It is recommended that largest practical horn antenna be used. It ensures maximum gain from the antenna. A larger antenna concentrates the radar beam more and returns more energy so has a longer span. It is also less susceptible to interference from obstructions and coatings on its surface. Bigger diameter antennas are recommended if free space propagation is used with a dielectric ≤1.9; such as found with liquefied gases.

Wave guide extensions can also be provided to move the horn past the edge of a deep nozzle. They can be shaped to redirect the signal. For instance, by using a wave guide, a radar transmitter can be mounted on the side of a tank. However, wave guide extensions work best with reflective surfaces that can return the most energy.

Antennas are available with various options. Besides wave guide extensions, purge and cooling connections are available and antennas are manufactured in a wide variety of materials. Also for horn antennas, tapered fluoropolymer covers are available for dusty or damp conditions.

7.3.8.4 Application

When selecting a radar transmitter, the maximum level change rate should be considered. Depending on the design, rates can vary from 15 mm/s to 200 mm/s (3 ft/min to 40 ft/min). Furthermore, a 1-second reading update is typical but updates of 100 msec are available.

To work properly, the useful signal reflected from the liquid surface has to be greater than the interference reflections. Radar level transmitters should have an unobstructed path to the liquid so it illuminates the maximum amount of surface. It should avoiding striking obstructions. Otherwise, the object rejection software could become saturated and the radar cannot work properly. In some cases, deflector plates placed above the offending obstructions may be necessary to improve the signal to noise ratio.

Radar beam angles range from 7° to 32°. Beam angles are inversely proportional to the antenna diameter and frequency. Narrow beams operate better with smaller vessels or in vessels with high length/diameter values. Tight beam angles are used in installations that have tall or narrow nozzles, where the nozzle is close to the vessel wall as well as to avoid in-flowing streams or other false targets; e.g. thermowells, injection probes, coils, agitators, etc.

Radar transmitters using pulse technology do not experience signal interference when operated together. FMCW radars on the other hand should use different frequencies or be installed so they do not see each other either by separating them or providing stilling wells.

Radar transmitters should not be installed at the vessel center or within 450 mm (18 in.) of the vessel wall. Ideally, the radar should be mounted half the radius from center. Radar transmitters installed in the center of a vessel, particularly those with dished heads, can experience multiple echoes. This effect can occur inside horizontal cylindrical vessels, especially if the antenna is recessed in a nozzle.

Generally, a horn antenna should extend 10 mm (0.4 in.) below the nozzle. However, with higher frequencies it is possible to recess the antenna in the nozzle or even provide a maintenance ball valve. In the case of a rod antenna, its active part has to extend beyond the nozzle. Otherwise, ringing occurs that completely blinds the instrument.

Provided by : www.spic.ir

Copyright American Petroleum Institute

Further, many radar designs emit a polarized signal which causes the beam to have an elliptical shape. Correctly orienting the radar considerably reduces the false echoes. These units should be mounted according to its orientation markings relative to the vessel wall. For external bridles the sensor polarization should be directed towards the vessel nozzle. In the case of internal still wells it should be oriented towards the equalization holes which should be located on the same axis.

Radar needs a transition zone for signal development. Accuracy and linearity may be less when the liquid surface is close to antenna. For horn antennas with high dielectric liquids, the upper end of the range should not be closer than 2 in. from the antenna edge and it should be increased with other antenna types and low dielectric liquids.

To reduce the hazard potential of corrosive chemicals, consideration should be given to storing them in a low dielectric plastic or FRP tank and using a radar transmitter mounted perpendicular to the liquid surface that shoots through the roof. The roof should also be sloped or domed slightly so condensation does not accumulate.

7.3.8.5 Stilling Wells

Stilling wells can be either in a vessel or part of a bridle. When they are mounted on a bridle, restrictions on the location and size of the side taps apply. Auxiliary taps for additional instruments should be minimized and should be opposite the vessel connections.

Radar stilling wells should be considered in the following instances:

a) extremely turbulent liquid surfaces;

b) vessel internal interferences;

c) low dielectric liquids such as LNG and LPGs.

There is some loss of accuracy when stilling wells are used. The signal is reflected off the stilling well sides so its transit time is increased. Also, some energy is lost to the creation of micro currents. This is because more than one microwave mode is generated and each mode has a unique propagation path. The degree that this occurs and the number of modes generated depends on the frequency and the diameter of the well.

A properly designed stilling well tends to increase the range, but range reduction is also possible. A 5 % to 15 % range reduction could occur if the pipe is not properly selected and prepared.

The key for optimizing radar performance with a stilling well is to match the antenna diameter to the stilling well as close as possible. A Schedule 80, 4 in. NPS stilling well (97.18 mm or 3.826 in. ID) should use a 4 in. or 6 in. antenna. The antenna cone should be trimmed to optimize its fit into the stilling well. There should be less than a 5 mm ($^3/_{16}$ in.) gap between the antenna and the stilling well.

Due to the occurrence of microwave modes, the accuracy loss grows as the frequency or well diameter is increased. With higher frequency radars, the maximum size is 4 in. Lower frequency instruments can be used with larger diameter bridles. Stilling wells or bridles above 8 in. are not recommended.

Generally, in a clean application high frequency radar with a 2 in. or 3 in. well is recommended. Lower frequency radar is preferred for applications that tend to coat the walls of the stilling well or have heavy vapors.

Radar stilling wells installed in vessel should have the following features:

a) is a corrosion resistant metal; e.g. stainless steel;

b) has constant diameter;

Provided by : www.spic.ir

Copyright American Petroleum Institute

c) no internal gaps, seams, weld beads, or burrs;

d) a smooth inside with a ten-point mean roughness Rz ≤30 micrometer;

e) has one vent hole above the surface at the top;

f) pipe size is ≤8 in. NPS;

g) minimum hole diameter is 6 mm ($^1/_4$ in.);

h) minimum distance between holes is 6 in.;

i) a deflector plate is provided at the bottom.

The material selected for the stilling well should have a low corrosion allowance and resist pitting. Any slots or holes should be de-burred, offset 180° and have a maximum pipe diameter of 10 %.

Consideration should be given to using a reference point (e.g. a 6 mm ($^1/_4$ in.) rod) at the end of the stilling well. A 45° deflector plate added to the bottom of a stilling well eliminates bottom reflections with low dielectric liquids less than 3.0.

Lastly, stilling wells have the advantage that a full port ball valve can be provided to allow antenna replacement. For best performance, the ID of the ball valve should exactly match the ID of the stilling well and aligned so that it provides a flush surface with the pipe when it is open.

7.3.8.6 Foam Measurement

The effect of foam on radar measurements is difficult to predict. The effect depends on the type of foam. The thickness, density, and the dielectric constant should be considered when evaluating an application with foam. In some applications the foam dampens the signal completely while other foams are transparent to the radar.

The signal can be absorbed or scattered. If the foam is wet; that is, consists of mostly of water, the microwaves are often reflected from the foam and the foam surface level is measured instead. On medium type foam the results are uncertain. With dry, low moisture foam the microwaves typically pass through and detect the liquid surface.

The radar frequency affects how foam is measured. Lower frequency radars in general penetrate foam better than high frequency radar. Foam tends to scatter the higher frequency signals. Lastly, since it operates at lower frequencies guided wave radar generally performs better than non-contact radar when foam is present.

7.3.8.7 Solids Measurement

Non-contact radar can be used to measure solids. Higher frequency units are preferred for their higher gain and tighter beam angle. Plastic pellets have low dielectrics so a high gain antenna is recommended to obtain a usable signal. Parabolic antennas are often used in this service. Coke has a typical dielectric of 3.0 but it varies depending on the amount of moisture. Dry coke forms some dust as it is handled but higher frequencies still work acceptability in these applications.

The angle of repose needs to be accounted for in solids measurements. It is recommended that non-contact radars be purchased with an adjustable ball joint connection so that the beam can be aligned to strike the solids pile perpendicular to its surface. Also for horn antennas in a dusty environment, a tapered fluoropolymer cover should be provided.

Provided by : www.spic.ir

Copyright American Petroleum Institute

7.3.8.8 High Vapor Pressure Liquids

Some high vapor pressure liquids (e.g. anhydrous ammonia) are a difficult to measure. They have a tendency to change between liquid and vapor states. They have a heavy fog like vapor layer above the surface that attenuates the signal. The maximum measuring range is a function of the pressure with higher pressures causing more attenuation.

7.3.8.9 Configuration and Commissioning

The level signal from horizontal cylindrical vessels or spheres can be linearized. Also, vessel heads and the like can be configured to provide the total vessel volume. For maximum accuracy a strapping table can be configured into some units.

Bench configuration can be used to initially set up the radar but training of the device on the vessel prior to startup is needed. The radar electronics has to store a map the of vessel interior while it is empty. Reflections caused by struts, weld seams, and vessel internals are fixed objects that need to be blanked out.

Radars are provided with an adaptive algorithm for tracking measured values. An acceptability zone is created where the upcoming measured value is defined by the preceding measurements together with the configured tracking speed. Measured values not located in the acceptability zone are ignored. Sporadic interference signals caused by turbulence, agitator blades, falling deposits, or periodic in-flowing streams are blanked out by online signal evaluation algorithms.

Double bounce echoes are commonly present in spherical or horizontal cylinder vessels and normally appear when the vessel is about 65 % full. They are an amplified echo from the roof that returns to the surface before being detected. The double bounce effect could cause the radar to lock onto the wrong echo. This is rejected by using a double bounce offset algorithm. Also other special situation algorithms are normally provided as well.

Lastly, a wave form echo display is needed to properly commission the device. Figure 36 shows a typical echo curve. The vertical axis should show the signal strength and the horizontal should show the distance/time. This display is critical for properly setting up the unit and diagnosing problems. Other traces such as false target profile and minimum threshold are also available.

7.3.9 Magnetostrictive

The magnetostrictive level transmitter is a positive buoyancy instrument. The magnetostrictive transmitter uses a mechanical pulse from a piezoelectric sensor that travels down a wire with magnetostrictive properties. A return signal is generated from where the magnetic field intersects the wire. The time-of-flight measurements are processed to determine the float location.

It is frequently used with a magnetic float gauge that is modified to accept a transmitter external to the chamber. See 7.5.3 for information on float gauges.

In an interface application, transmitters can be provided with outputs for both absolute and interface indication by using two floats. Flexible sensing elements are also available.

In addition, there are guided versions that mount inside a vessel. They can operate up to 260 °C (500 °F) over lengths of 10 m (33 ft). Accuracies of ±0.380 mm (0.015 in.) are possible. It meets the accuracy requirements of API *MPMS* Ch 3.1B and API *MPMS* Ch. 3.3 for tank gauges.

Magnetostrictive transmitters have many of the same problems that displacers have, plus they are more prone to coating. This is particularly true for the rod guided devices. Still, unlike a displacer, it does not use a spring or torque tube so it is less affected by corrosion or oscillations.

Provided by : www.spic.ir

Copyright American Petroleum Institute

7.4 Level Switches

7.4.1 General

Process switches including level switches are mostly considered to be legacy devices. When possible, it is recommended that devices with diagnostic capabilities (e.g. transmitters) be provided.

Also, except for buoyancy devices (i.e. ball float and displacer switches), level switches require a power source or a special interface; e.g. a NAMUR switch module. However, buoyancy devices are among the least reliable process sensors.

Below are various types of level switches:

— buoyancy switches;

— hydrostatic pressure switches for atmospheric tanks;

— differential pressure switches for pressurized vessels;

— capacitance/radio frequency switches;

— vibrating fork/sonic switches;

— nuclear switches;

— optical switches;

— thermal switches.

For a detailed discussion of alarms and protective devices, refer to API 554 Part 1 and API 554 Part 2. API 2350 and NFPA 30 provide the requirements for storage tanks overfilling protection.

7.4.2 Level Switch Application

Range selection considerations for high or low level discrete switches are the same as those in 7.2.2. Below are additional considerations for level switches.

a) Level switches used as protective devices should have separate connections to the vessel independent of other instruments.

b) The installation of float switches is the same as that of the displacement transmitters covered in 7.3.3.

c) To clean out the chamber, float switches should have flanges provided.

d) When new, level float switches have a falling level trip point of ≈76 mm (3 in.) below the upper nozzle and a rising trip point of ≈57 mm ($2^1/_4$ in.). Depending on the specific gravity and the design these values can vary ±23 mm ($^7/_8$ in.). Typically, 457 mm (18 in.) is allowed between the connection centers.

e) The appropriate contacts should be provided. See 5.6.1.4 for issues concerning contact corrosion.

f) If slack cable switches are used with a floating roof tank, the liquid specific gravity should be considered so they can continue to function if the roof sinks.

g) To ensure that the correct spring is provided, cable displacer and slack cable switches should be specified with their actual cable length.

Provided by : www.spic.ir

Copyright American Petroleum Institute

h) Electronic switches, such as capacitance/radio frequency and sonic switches can be installed in vessels or external cages.

i) Capacitance/radio frequency switches used with FRP tanks and other insulated vessels in conductive liquids need to be provided with a ground path.

j) Low level nuclear level switches should have their count level or trip point set above the expected background radiation.

k) Hydrostatic switches or a differential pressure switches should be located so they are not blocked by sediment. See 7.3.2 concerning hydrostatic level measurement.

For switch applications requiring better reliability, switches with self-checking diagnostics and a live zero should be considered e.g. provided by a NAMUR signal according to IEC 60947-5-6.

7.4.3 Testing

Replicate the correct buoyancy, float level switches should be tested with the actual liquid or a liquid with the same specific gravity. However, it should be recognized this could require the handling and disposal of possibly hazardous liquids. Mineral oil which has a 0.8 S.G. can be used to simulate heavier hydrocarbons.

High level buoyancy level switches can have an operation checker. This is an integral lever with a cable run to grade. The lever lifts the float or displacer to activate the switch. However, to provide a realistic simulation of the buoyancy force, calibrated weights or other means should be used. Also, a low friction cable guide or protected free handing cable should be used with the lever to ensure reliability.

Electronic switches are available with testing circuits that are actuated by a push button or automatically tested in the case of a NAMUR signal according to IEC 60947-5-6 or a similar two wire switch.

One method for periodic switch testing is by installing connections at the trip points and piping them to the sensor chambers at ground level. See Figure 37 for an illustration of level switches mounted a grade level. In operation, the liquid flows downward and fills the chamber activating the switch. The filling of the chamber with liquid can accurately test the switch without going onto the tank roof. However, resetting the switch requires the draining and disposal of the liquid in the switch.

7.5 Local Level Indicators

7.5.1 General

Locally mounted level gauges include tubular gauges, flat glass gauge, and magnetic gauges. However, due to their fragile construction, tubular gauge glasses are not recommended for hydrocarbons. They should only be used with non-toxic liquids at stored ambient conditions; e.g. anti-foam agents, corrosion inhibitors, etc. Further, gauge glass protectors are recommended to prevent spills when the tube becomes damaged.

7.5.2 Armored Gauge Glasses

7.5.2.1 Application

Flat glass gauges are no longer recommended for most hydrocarbons or for services requiring Class 600 flanges or higher. Still, ASME Section I-2013, paragraph PG-60.1 requires that boiler drums have at least one gauge glass; i.e. “a transparent device that permits visual determination of the water level.” See Section 3.9.1b for the boiler level gauge requirements.

Provided by : www.spic.ir

Copyright American Petroleum Institute

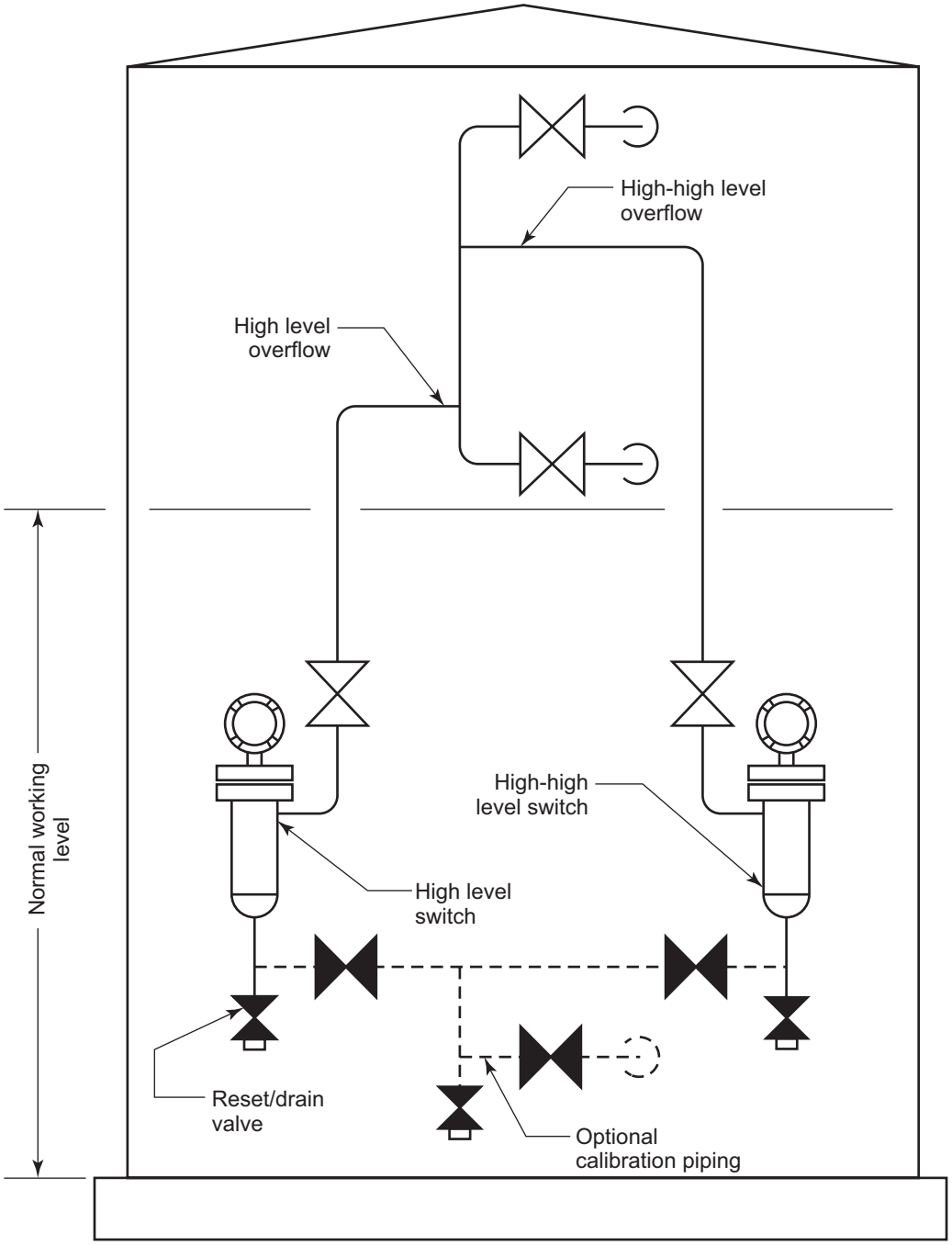

Figure 37—Grade-mounted Overflow Alarm Switches

Otherwise, due to Recognized and Generally Accepted Good Engineering Practices (RAGAGEP) regulations, specifically OSHA 29 *CFR* 1910.119 (D) (3) (ii), it is a common policy to not use glass based instruments in process services.

The use of glass gauges in C_4 and lighter services is often prohibited. These are LPG liquids which can quickly vaporize at ambient conditions and are usually processed at pressure ≥1.38 MPa (200 psig). For instance, if a glass is fractured during firefighting efforts, the broken gauge could become a fuel source.

Provided by : www.spic.ir

Copyright American Petroleum Institute

Flat glass gauges are heavy, and long unsupported sections can impose an unacceptable strain on vessel nozzles. Further, the glass often becomes fouled and requires frequent cleaning. Lastly, some of the lower transmitter span is not observable since the visible portion starts about 115 mm ($4^1/_2$ in.) above the tap with the standard end connected gauge.

To avoid a hazardous conditions with gauge glasses, a gauge cock with a ball check; which acts as an excess flow valve, has been used between the vessel and the gauge. However, many users have found that ball checks were unacceptable in terms of maintenance and reliability.

Still, there are a sizable number of legacy installations that have to be kept in an acceptable working condition. The guidelines in this section are intended to assist in the operation of these installations as well as those remaining installations that do not constitute a safety or environmental hazard.

7.5.2.2 Gauge Types

There are two types of flat glass gauges: reflex and through-vision. Reflex gauges use one piece of glass in a section. The process side of the glass has parallel 45° prisms cut into it. Other than CO_2, these gauges can be operate with almost any clean liquid.

A 42° angle of reflection exists between vapors and glass. So, in the vapor region, the light is reflected back to the surface so it appears silvery white. However, the light does not reflect back in the liquid region because the angle of reflection is greater than 45° for liquids. Since the chamber rear is painted black, the glass surface appears black.

Reflex gauges can operate with C_3 and lighter hydrocarbons but it should be ensured that the light hydrocarbons do not dissolve the black coating. This reduces its effectiveness.

Through-vision gauges are used in interface services because the angle of reflection is greater than 45° for both phases, making reflex gauges unusable.

Transparent (i.e. through-vision) gauges use two pieces of “flat glass” and a second set of covers. Consequently they weigh twice as much. Further, for a given size, they are not as strong as reflex gauges. Transparent gauges should be considered in the following services:

— Acid or caustic services;

— Dirty or dark colored liquid;

— Liquid viscosity ≥10 cP;

— High pressure steam;

— Interface service;

— Liquid illumination.

Large chamber gauges, which can either be reflex or transparent gauges, are provided to indicate a level that tends to surge in the gauge as well as being used in boiling and vaporizing services. They are also used for extremely viscous liquids as well.

A weld pad gauge is welded directly to vessel or tank. This allows direct viewing into a vessel. Radius pads from 50 mm to 300 mm (2 in. to 12 in.) allow installation on curved surface. It does not use gauge cocks so the gauge cannot be isolated. Except for small non-continuous use like emulsion decanter pots it is not recommended.

Provided by : www.spic.ir

Copyright American Petroleum Institute

7.5.2.3 Chamber Connections

Installation flexibility is provided if thread nipples are allowed between the gauge valve and a gauge with end connections. This allows the centerline to be altered by changing the nipple length. Further, the gauge can be rotated to change the orientation. In this case the drain and vent connections are part of the gauge valve.

Side connections are used for minimum vessel centerline connections. The chamber is extended slightly to clear the cover bolts and tapped on the side. The chamber ends are tapped for the vent and drain connections. Without vertical adjustability accurate fabrication of both the gauge and vessel is a critical. However, the gauge can be rotated 180° to change position from one side of the nozzles to the other.

Back connections are infrequently used and are only appropriate for reflex type gauges. Back connections are made the same way as side connections except that they are opposite the glass.

7.5.2.4 Gauge Body

The chamber together with the glass is the pressure retaining element. It provides rigidity and is tapped for connect to the process. The gauge chamber is the only wetted metal part. The chamber's surface provides the flat gasket seat. To fabricate a chamber, a hole is drilled down a length of bar stock and the vision slots are milled into it.

Chambers are typically fabricated in standard lengths based upon the number and size of the glass to be used. However, within the limits of the glass selected and the cover bolting, a chamber can be custom fabricated. The following modifications are possible:

— mixing of side and top taps;

— taps on both sides;

— extended length chambers;

— mixed glass sizes;

— multiple taps for emulsions.

The bolted covers do not contact the process fluid. Instead, the cover holds the glass up against the chamber and applies the needed compression to the various components. They are an important element in maintaining the pressure boundary. When the gauge is operating at the design temperature and pressure conditions, the cover bears the resulting stress.

For most process services, forged carbon steel, Grade A-105 or similar is the preferred cover material rather than ductile iron. B7 or similar bolts are used. For services below –45.6 °C (–50 °F) Type 316L Stainless Steel should be specified for chambers and covers. In higher temperature services, spring washers are sometimes needed to maintain consistent force on the cover.

A fluoropolymer glass-filled gasket is the standard gasket and is suitable for temperatures up to 205 °C (400 °F). A flexible graphite gasket is used in high temperature and pressure applications. It is laminated graphite with a flat 0.05 mm (0.002 in.) thick 316/316L Stainless Steel insert. The temperature range in an oxidizing environment is up to 400 °C (750 °F) and 980 °C (1800 °F) in a non-oxidizing environment. The maximum pressure graphite gaskets operate at is 13.8 MPa (2000 psig). They are also suitable for 10.3 MPa (1500 psig) and 313 °C (596 °F) saturated steam service.

Cushions are placed between glass and cover to secure the position of glass and prevent metal contact. The cushions should be of the same material as the gaskets or a harder material.

Provided by : www.spic.ir

Copyright American Petroleum Institute

7.5.2.5 Glass

Tempered glass along with gaskets retains the fluid. Tempering adds strength to the outer layer. Scratches or imperfections on the surface reduce its pressure holding ability.

There are three glass widths; the standard width is 34 mm (1.3 in.), a 30 mm which is provided by EU vendors, and then there is a 25 mm width. The 25 mm width, which has limited application in refineries, starts at 260 mm ($10^1/_4$ in.) visible length and is available in sections up to 489 mm ($19^1/_4$ in.).

For the common 33 mm (1.3 in.) width, gauge glass comes in nine standard sizes with visible lengths ranging from 95 mm to 320 mm ($3^3/_4$ to $12^5/_8$ in.) with the covers being 38 mm ($1^1/_2$ in.) longer than the visible length. The strength deceases with length. However, a 340 mm ($13^3/_8$ in.) Size Nine, which is by far the most common sized used, mounted on a through-vision gauge is rated for 6.90 MPa (1000 psig) at 37.8 °C (100 °F).

Borosilicate glass, usable up to 315 °C (600 °F), has the best chemical corrosion resistance to acidic solutions, but is less resistant to alkaline solutions. It has a low thermal expansion and along with tempering provides it with resistance to sudden temperature changes.

Aluminosilicate glass has temperature and pressure ratings that exceed borosilicate. Aluminosilicate glass has a temperature rating up to 425 °C (800 °F). It is more corrosion resistant to alkaline solutions. However, the rate of corrosion of aluminosilicate in acid, caustic solutions, and steam are greater than borosilicate glass. It should be inspected daily for corrosive attack or provided with an inert shield.

Quartz is made by fusing quartz crystal and operates up to 540 °C (1000 °F). It is a harder and more abrasive resistant material than glass. It is more resistant to thermal shock but it is more brittle than glass.

7.5.2.6 Gauge Valves

Gauge cocks are angle valves with special features. Gauge valves have three connections: vessel, gauge, and vent and drain. Almost every gauge valve has a $^3/_4$ in. tailpiece connection to a vessel. When a 2 in. flange connection is specified, a reducing flange is used.Figure 38 shows a typical gauge cock. The gauge connection is usually tightly coupled to the gauge using a $^1/_2$ or $^3/_4$ in. threaded or socket weld nipple. The connection most used is $^3/_4$ in. NPS. The vent and drain taps are $^1/_2$ in. female NPT connections. Most gauge cocks have an offset stem. Offset valve bodies with $^3/_4$ in. taps are recommended for end connected gauges. This allows glass cleaning with a bottle brush through the end connections. A $^1/_2$ in. NPS drain/vent makes these valves asymmetrical. End connected gauges require a right hand offset valve and a left handed offset valve. Offset valves offer closer connection centers for side connected gauges, since the offset can be turned inwards to make the vessel center dimension smaller than the gauge centers.

Gauge valves have ball checks as a standard feature. In the event of gauge failure, they help prevent vessel content loss. However, they should not be used in vacuum or steam services.

Ball checks are not necessary for boiler drums according to ASME Section I. The ball check can prevent steam from passing through the gauge during periodic blowdown of the steam gauge. If ball checks are used for boiler drum applications, they should be the vertical rising type and used only on the lower valve. The gauge cannot be blown down when ball checks are used on the upper valves.

Quick closing valves with chain operators are sometimes used with steam gauges. A quarter turn opens the valve. Still, $1^1/_2$ turns are necessary to back the stem out to the back seat.

The wetted valve parts typically consist of the body, trim and tailpieces. The valve body should be consistent with the chamber material. Valve bodies are usually forged and the gauge chambers are bar stock. The ASTM specifications can differ but the metallurgy should be the same.

Provided by : www.spic.ir

Copyright American Petroleum Institute

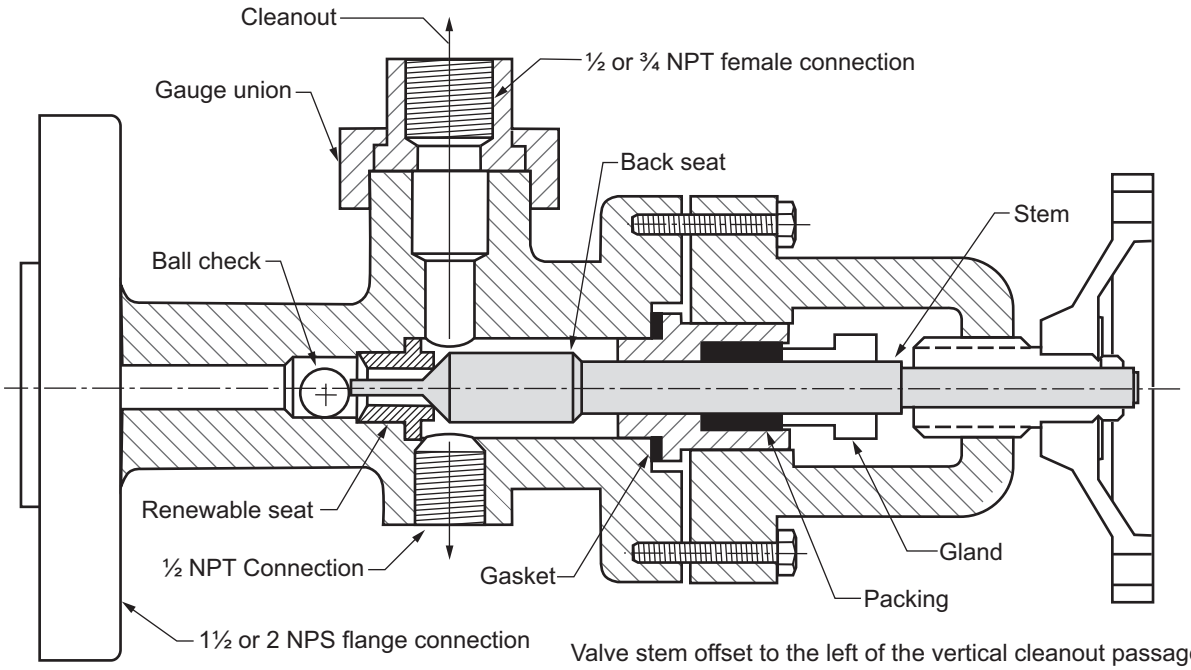

Figure 38—Typical Bolted Bonnet Gauge Valve

Trim parts consist of the valve stem, seat, and ball check. The minimum trim should be a martensitic stainless steel with a Type 416 Stainless Steel stem and seat and a Type 440 Stainless Steel ball. A Type 416 Stainless Steel stem prevents thread galling. These valves are equivalent to an API 602 forged steel valve with a CN 1 trim. CoCr-A facing is unnecessary since these valves are not intended for throttling or blowing down the gauge.

For refinery services, most gauge valves are equipped with flanges for connection to the bridle or vessel nozzles. Full penetration butt weld flanges should be used for the process connection. Threaded, slip-on and socket weld flanges should be avoided.

For an end connected gauge, integral gauge unions allow orientation of the glass. Additionally, the gauge can be easily removed for service. Since a leak cannot be isolated, tailpieces with unions on the vessel side should not be provided.

Union connections can be flat or spherical. A flat union has a better sealing surface. A spherical union can adjust for slight non-parallel errors in the vessel connection by using it together with a rolling pipe transition to the vessel. Vertical errors can be fixed as well. Yet, spherical unions require more space than flat unions. The minimum gauge centers using flat unions are increased by at least 40 mm ($1\frac{1}{2}$ in.). Unlike flat unions spherical unions are only available with a $\frac{3}{4}$ NPS male connection.

A bonnet holds the packing against the valve stem. Screwed, union, or bolted bonnets are the three basic types.

The integral or screwed bonnet does not allow seat renewal. Stem threads are in contact with the process and integral to the valve. This type of valve is not recommended.

The union bonnet is held in place with a nut and allows the valve packing to be removed from the body as a sleeve assembly. The stem threads are in direct contact with the process; however they are part of the replaceable sleeve assembly. The seat is renewable but it is stainless steel regardless of the body.

Provided by : www.spic.ir

Copyright American Petroleum Institute

A backseat stem is available as an option for the union bonnet valve. In the valve fully open position, the back seat protects the packing from the process. This reduces leakage and extends the packing life.

A bolted bonnet valve with an outside screw and yoke is recommended for most process applications. Its features include outside stem threads, a renewable seat and a back seat stem.

7.5.2.7 Illuminators and Gauge Accessories

When needed, illuminators should be purchased with the gauge. They use either low wattage bulbs or LEDs. Incandescent bulbs or compact fluorescent lamps were the original illuminators. They used a plastic diffuser extension to spread the light across the gauge. Even with a diffuser, the light was uneven, being too bright in the center and dim at the edges. Incandescent and fluorescent bulbs burn out after less than a thousand and fifteen thousand hours of operation respectively. So to ensure a useful life, it was often necessary to equip the power circuit with a spring return switch to ensure that it was turned off after use.

LED illuminators provide brilliant back lighting. Individual five watt sources are positioned every 12 mm ($^1/_2$ in.). They have a 100,000 hour life span so it requires minimum maintenance. Further, if a LED fails overlapping lighting ensures that the liquid is illuminated. With a continuous life greater than ten years these gauges can be continuously illuminated.

Non-frost extensions are recommended for process temperatures below –18 °C (0 °F). Otherwise, frost and ice forms on the glass from contact with ambient air. A non-frosting device consists of a plastic extension which makes direct contact with the gauge glass and extends beyond the cover so that the frost build up does not obscure the reading.

A calibrated stainless steel scale can be mounted alongside the gauge. Gauge scales can be calibrated in inches, centimeters or percentage.

7.5.2.8 Gauge Shields

Gauge glass can be attacked by steam, hydrofluoric acid, amines, caustic, etc. In these services, a protective film is recommended. When a shield is used, the glass is no longer a wetted part but it is still a strength member. A flat surface is needed to back the shield so through vision gauges are necessary.

The most commonly used shield is mica but other shields (e.g. PCTFE) are used when mica is not acceptable. Sunlight discolors some materials, so this should be considered when a film is selected.

Mica shields are widely used to protect the glass surface from the corrosive effects of hot alkaline or acidic solutions. The most common application is steam above 2.07 MPa (300 psig). Using a thickness between 0.23 to 0.31 mm (0.009 to 0.012 in.) prevents etching that weakens the glass. This thickness is usually achieved by two sheets of cleaved mica. As one mica lamination degrades, a new layer is exposed.

There is no substitute for mica. It is found in sheets. Reliability is determined by total thickness and relative freedom from air pockets. The quality of mica is determined by visual examination according to ASTM D351. Consequently, mica is classified by grades. The most common mica grades used for liquid level gauge applications are listed below.

— Mica grade “*V4 Ruby Good Stained*” is suitable for saturated steam service to 4.14 MPa (600 psig). It is hard, with uniform color, can contain slight crystallographic discoloration, is free from vegetable and mineral stains, cracks, buckles, and other similar defects and foreign inclusions, can be somewhat wavy but not rippled, can contain some air inclusions but not in more than $^2/_3$ of the usable area.

— Mica grade “*V2 Ruby Clear and Slightly Stained*” is suitable for saturated steam service from 4.14 MPa (600 psig) to 10.3 MPa (1500 psig). It is hard, of uniform color, can contain slight crystallographic discoloration and is free from vegetable and mineral stains, cracks, buckles, and other similar defects and foreign inclusions except for a few tiny air inclusions but not in more than $^1/_4$ of the useable area.

Provided by : www.spic.ir

Copyright American Petroleum Institute

7.5.2.9 Steam Gauge Failure

Most steam gauge glass failures are related to the mica. The primary cause is hydrothermal destruction of the mica by decompression during gauge blowdowns.

Mica has a laminated structure. While in use, steam and water slowly migrate through micro cracks and inclusions into the laminations. When the pressure is suddenly dropped during a blowdown, the tightly packed laminations resist equalization; instead the laminations are forced apart by explosive decompression of steam and flashing condensate causing the mica to flake or spall. This prematurely exposes more mica lowering its life. The higher the operating pressure the greater the destruction.

Instead, blowdowns should be kept to a minimum to preserve mica life. Instead, a wash is recommended. Washes are as effective as blowdowns for cleaning sediment.

Also, as mica goes into solution, its surface can become scarred with buckles or rhombic impressions that affect visibility but blowdowns do not correct this problem. They are inherent in the underlying the structure of the mica.

Mica life of 4 to 8 months can be expected for pressures above 10.7 MPa (1550 psig). Prior to catastrophic failure, the indication of impending gauge failure is that the glass takes on a milky white appearance.

7.5.2.10 Gauge Assemblies

As a consequence of the weight, the number of gauge sections is normally limited to four or a total length of 1525 mm (5 ft). A single gauge should not exceed 36 kilograms (80 lb). However, for non-critical applications less than 205 °C (400 °F), longer glasses can be used. However, gauges with more than four sections require additional support. Support plates welded to the chamber can be provided as part of the gauge.

Expansion loops could be necessary to compensate for temperature expansion and contraction. Steam services greater than 5.17 MPa (750 psig) should have expansion coils between the top valve and the gauge.

Overlapping two or more gauges allows observation of ranges that cannot be viewed by a four section gauge.

7.5.2.11 Installation

Vessel connections should be arranged so that there is always a tap in both phases being measured. Figure 39 shows two commonly recommended methods of mounting multiple gauges on horizontal vessels where both liquid-liquid and liquid vapor interfaces are being observed.

Where the vessel connection is a flanged nozzle and the block valve is mounted directly on the nozzle, the recommended minimum size is 2 in. Further, based upon experience, most users install a standard block valve between the gauge valve and the vessel.

7.5.3 Magnetic Gauges

Magnetic gauges are a positive buoyancy device. Magnetic gauges can be equipped with magnetostrictive transmitters and switches. Their construction consists of a float inside a non-ferrous chamber and a magnetically coupled indicator. They are mounted similarly to displacers.

Magnetic gauges also can be mounted on the top of a vessel or tank. This configuration is useful for non-vented or closed vessels that are located in a pit where confined space entry restrictions exist. They can be equipped with a full port valve at the nozzle for maintenance. However, the chamber needs an extended section to allow the extraction of the entire floating assembly. A stilling well or guide should also be provided for top-mounted magnetic level gauges to protect against float and tube damage.

Provided by : www.spic.ir

Copyright American Petroleum Institute

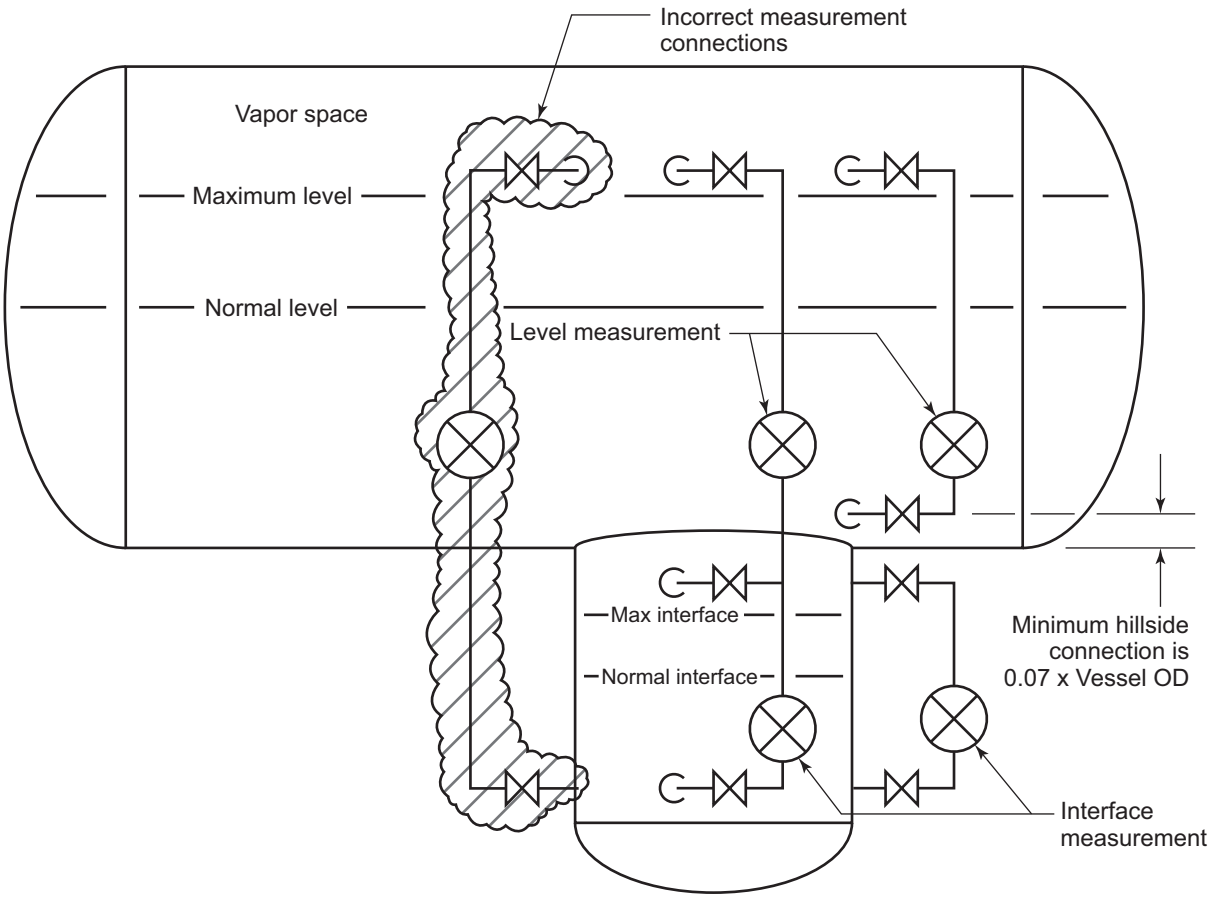

Figure 39—Measurement Taps for Interface and Level Services

Magnetic gauges should be considered for the following applications:

a) for toxic liquids and gases; e.g. H_2S;

b) for C_4 and lighter hydrocarbons or liquids above their ignition temperature;

c) where a fire hazard exists due to gauge failure;

d) for high pressure services where the glass can catastrophically fail;

e) where glass becomes coated or etched or is otherwise unsuitable for the process;

f) if a long armored gauge assembly causes excessive stress on vessel connections.

7.5.3.1 Float Chamber

Chambers can be fabricated to any length over 600 mm (2 ft). The minimum float chamber diameter should be NPS 2. Chambers should conform to the most stringent pipe material specification associated with the vessel. Side connected gauges are preferred for Schedule 40 stainless steel and lighter chambers. The gauge bottom has a flange to remove the float and the top end has a pipe cap. However, the top can be provided with a flange if more accessibility is needed. The bottom is provided with a plugged drain valve and the top has a plugged vent valve.

Provided by : www.spic.ir

Copyright American Petroleum Institute

Also, to reduce material buildup, the chamber interior should be honed to a 180 grit or better finish. Purging the lower gauge tap should be considered for dirty, plugging, or polymerizing liquids. Further, PTFE or, for higher temperatures, FFKM coatings should be considered in polymerizing services; e.g. a Debutanizer column. Electro-polishing both the float and the interior is another alternative for polymerizing services.

As a minimum, the chamber should be fabricated according to ASME B31.3 or 31.1 if it is in boiler service. The chamber can be constructed according to ASME Section VIII-2011, Division 1. The ASME Code UM stamp is easier to obtain. However, the UM stamp is limited to 142×10^3 cc (5 ft^3) and a 1.72 MPa (250 psig) design pressure or 42.5×10^3 cc ($1^1/_2$ ft^3) and a 4.14 MPa (600 psig) design pressure. Otherwise, the float chamber would require a Code “U” stamp.

For interface applications with emulsions, a chamber with three or more vessel connections should be considered. See Figure 39 for multi-tap installations. Alternatively, a top mounted gauge should be considered for emulsions. Top mounted gauges avoid having a non-representative sample being trapped inside the chamber.

Chambers should have stop springs. The springs should be set to stop the float at the top and bottom of the indicator.

When solids are expected or there are liquids close to their fluid vapor pressure more clearance is needed. A large chamber with guides to hold the float to the side with the indicator should be provided.

7.5.3.2 Floats

The float material should be compatible with the process. The float should be suitable for the maximum vessel operating pressure. Floats can sink and measures should be taken prevent sinking but vented or pressure equalized floats are not recommended. Rather, sealed floats should be provided. The float length should be minimized. Floats longer than 250 mm (10 in.) should be avoided.

Floats should have magnets around their entire circumference or use a concentric magnet design. The magnet’s Curie point should be above the fluid temperature. High temperature magnets should be specified for applications exceeding 150 °C (300 °F). The maximum operating Curie temperature for a magnetite is 540 °C (1000 °F).

The magnet assembly should be placed in the float so that the indicated level coincides with the actual level at the normal specific gravity. However, the float should remain buoyant at the lowest specific gravity expected. Float curves should be provided for each float that shows the immersion depth versus specific gravity. They should also list the volume, weight, outside diameter, and overall length.

Absolute level floats should be designed with a ≥0.735 Newton (2.65 oz) buoyant force with the minimum specific gravity when they are totally submerged in the liquid. Liquid/liquid floats should have a ≥0.735 Newton (2.65 oz) positive buoyant when totally submerged in the lower liquid.

Floats should be tagged and controlled so that they stay mated with the correct instrument. The floats should be etched or engraved with the gauge serial number, tag and a direction arrow.

7.5.3.3 Indicators

Indicators can be the follower or flipper type (see Figure 40 and Figure 41). Indicators should be equipped with a stainless steel scale marked with 10 mm ($^1/_2$ in.) divisions. The markings should be preferably laser engraved and filled with a chemical resistant paint. Also, it should be possible to reposition the indicator.

Follower or shuttle type indicators should be housed in a glass tube. The tube should be hermetically sealed to prevent condensation and filled with an inert gas. The tube should be held firmly to the float chamber with a stainless steel channel. Since they are easily broken they should be covered and protected against damage until commissioning.

Provided by : www.spic.ir

Copyright American Petroleum Institute

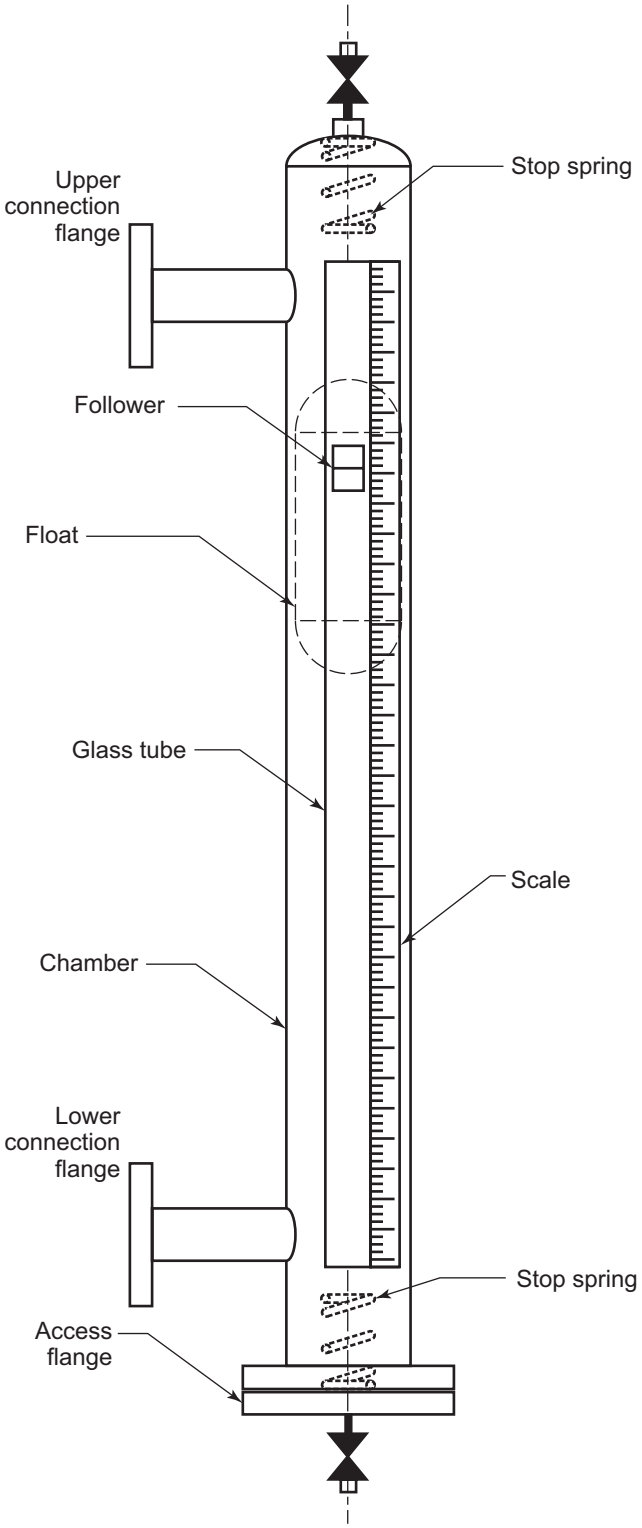

Figure 40—Follower-type Magnetic Level Gauge

Provided by : www.spic.ir

Copyright American Petroleum Institute

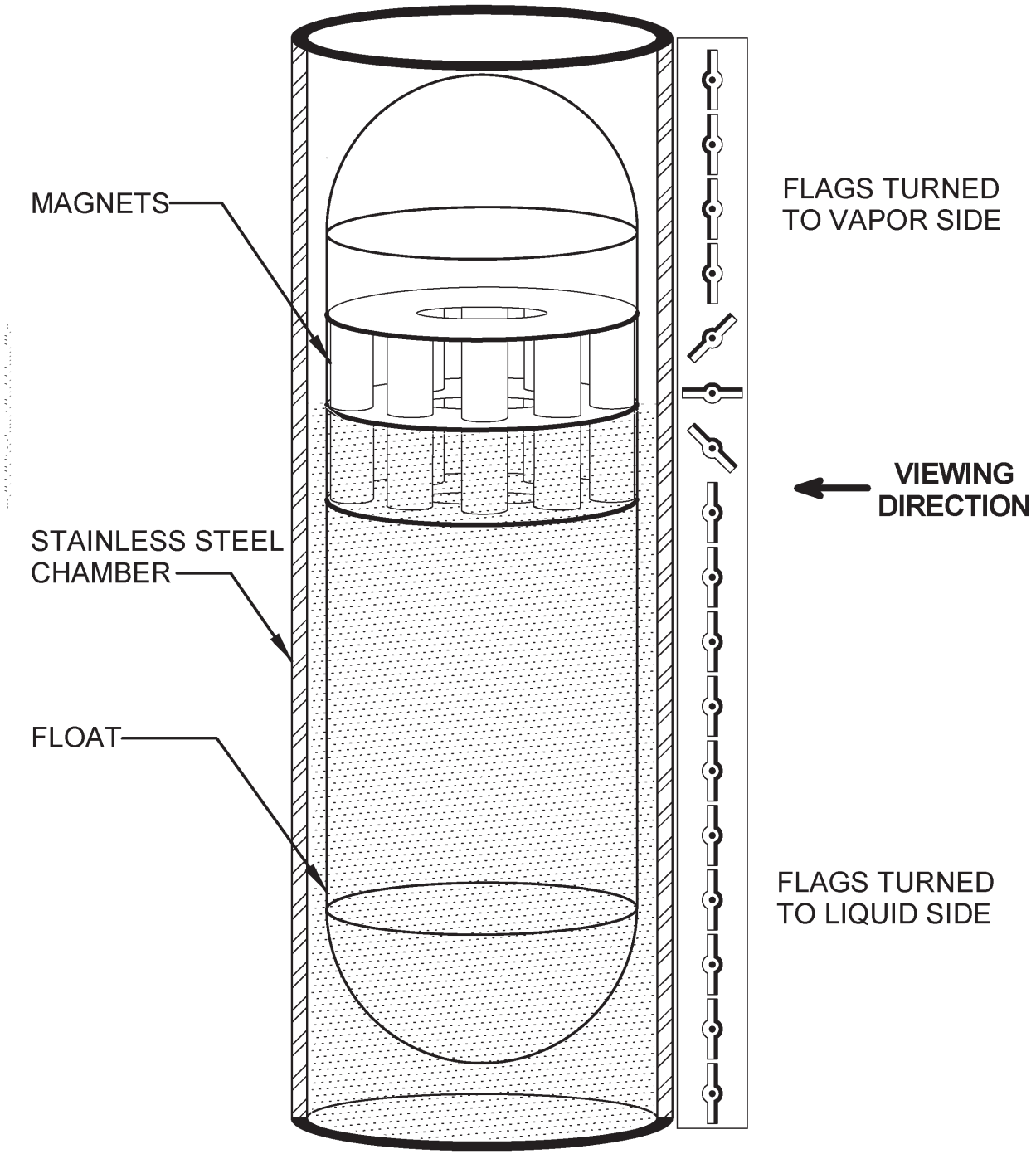

Figure 41—Magnetic Gauge with Flag Indicators

Provided by : www.spic.ir

Copyright American Petroleum Institute

Flipper or magnetic bar graph type indicators should be in a hermetically sealed enclosure. It should be held firmly to the float chamber. The flipper colors are usually yellow/black or red/white. The individual segments should be magnetized and should be interlocked to prevent random changes from vibration.

Magnetic bar graph type indicators are recommended for the following applications:

— float chambers heavier than Schedule 40;

— gauges requiring frost extensions;

— liquids that operate near their vapor pressure (e.g. C4 and lighter hydrocarbons) or boils violently (e.g. steam generators).

Gauges operating below ambient freezing levels should be equipped with frost extensions that are field installable. They should be removable without disturbing the insulation. The extension should accommodate the following thickness of insulation:

— 50 mm (2 in.) to –73.3 °C (–100 °F);

— 75 mm (3 in.) to –129 °C (–200 °F);

— 100 mm (4 in.) to –195 °C (–320 °F).

7.5.3.4 Interface Measurement

For interface measurement floats can be weighted to float with a specific gravity difference of less than 0.1 between the upper and lower phase. An interface float can be upwards of 460 mm (18 in.) long. By increasing chamber diameter the length of the float is reduced to a more acceptable length.

The minimum float chamber size for interface applications are as follows:

— NPS $2^1/_2$ for specific gravity differences less than 0.27;

— NPS 3 for specific gravity differences less than 0.17;

— NPS 4 for specific gravity differences less than 0.12.

A minimum specific gravity difference of 0.07 is recommended for interface applications.

To work properly, the chamber should be flushed and drained regularly to remove emulsions and lighter hydrocarbons to reestablish the correct reading. In interface service, they should be equipped with drains and vents so that persistent emulsions can be removed.

A means for adding a minute amount of surfactant can be consider as well. Since a gauge experiences almost no turnover, it would remain effective for an extended period causing almost no process contamination.

7.5.3.5 Transmitters and Switches

Magnetostrictive type transmitters can be used with magnetic level gauges. The specific gravity error of a transmitter signal can be significantly less than other buoyancy devices when moderate length floats are used and are properly weighted. See 7.3.9 for details on magnetostrictive transmitters.

The level switch reacts to passing of the float. The switches should latch into position once the float passes and unlatch as the float returns. Latching switches can get out of phase with the process. The contacts can become reversed and be open when they should be closed so they should not be used for important or critical functions.

Provided by : www.spic.ir

Copyright American Petroleum Institute

The transmitter and switches should be rated for the maximum rated temperature for the magnetic level gauge. Heat shields, chamber insulation, or mounting options might be necessary to achieve this rating.

7.5.3.6 Installation and Operation

Generally magnetic level gauge installation is the same as for glass level gauges and displacers. They should be easily readable and accessible along their entire length for maintenance. Bottom clearance should be provided for float replacement and removal before hydro testing.

Further, magnetic gauges should not be located where its magnetic field is affected. The magnetic level gauge centerline should be located a minimum of twenty centimeters (8 in.) from ferrous materials; e.g. floor grating, ladders, pipe, structural supports, etc.

A magnetic trap could be considered between vessel and float chamber if during operation the liquid contains significant amounts of ferrous particles; e.g. rust or pipe rouge. The float could also require periodic cleaning to maintain its specific gravity and prevent it from jamming. A light distillate is often used to help dissolve heavy oil coatings on the float and chamber.

7.6 Specific Gravity Precautions

There is a significant specific gravity problem with negative buoyancy devices (e.g. displacers), differential pressure transmitters, and other liquid density based instruments. To a degree, even positive buoyancy devices are affected.

7.6.1 Specific Gravity Differences in the Vessel

Hydrostatic and negative buoyancy level instruments read incorrectly if the liquid specific gravity is different from the calibration basis. This is a significant problem when the liquid is lighter than the calibration basis. The liquid indication is less than 100 % when the upper tap becomes covered.

The specific gravity changes two ways. A lighter liquid could be present (see Figure 42), or the expected liquid is at a higher temperature (see Figure 43). Also, boiling and aeration can result in levels being higher than their reading.

It is recommended that the transmitter be calibrated for the lightest density expected, including startup, shutdown, emergencies, etc. This approach can result in vessel levels being less than displayed but it prevents undetected overfilling.

If the vessel outlet is located below the instrument nozzle, premature loss of the indication at the lower end of the scale does not create a problem. If the zero point is set above the nozzle, there is some error but the instrument does read zero prior to reaching the lower tap.

It is also recommended that an alternate device (e.g. Guided Wave Radar (GWR) or a level switch) be provided as a backup indication for over fill protection that is not as dependent on specific gravity.

7.6.2 Specific Gravity Differences in the Impulse Piping

Also, changes in the liquid seals significantly affect the measurements. Dilution or loss of liquids in wet legs causes a differential level transmitter to have an erroneous reading. As the liquid seal is lost the true level is less than the apparent level. Loss of seal liquids can occur with liquids in vaporizers or boilers. These liquids can flash when the pressure suddenly drops.

More significantly, as the seal liquid increases in density; such as water replacing hydrocarbons in the wet leg, the actual level is more than the apparent level. In this situation, the transmitter output saturates at less than full signal and this can lead to an overfilling situation. Further, as liquid is introduced into a dry leg, the true level is more than the apparent level.

Provided by : www.spic.ir

Copyright American Petroleum Institute

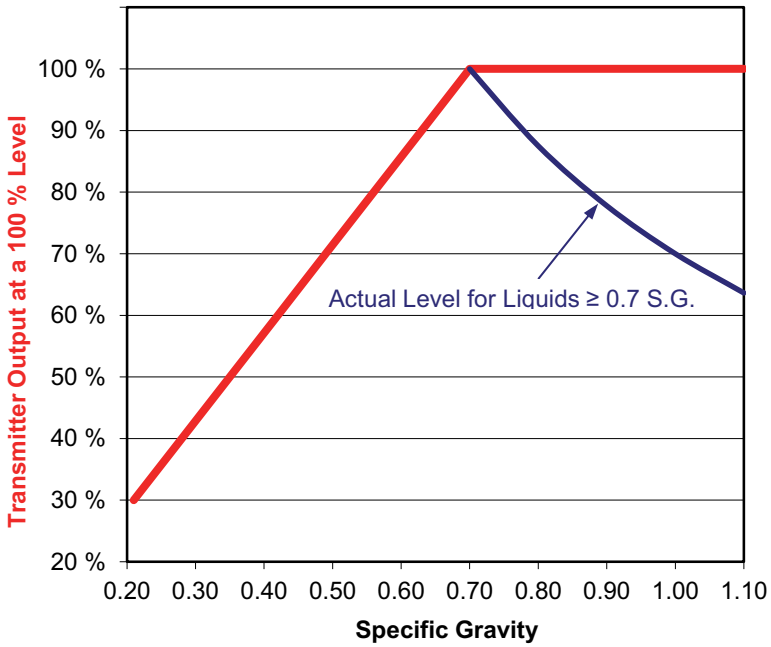

Figure 42—Transmitter Saturation Values with a 0.70 S.G. Calibration

7.6.3 Specific Gravity Differences in Bridles

Bridles should be used with caution. Density changes occur while operating, especially during transitions. Lighter liquids become trapped inside the bridle as shown in Figure 44**.**

Once this occurs, the level and interface instruments can only operate correctly if their lower connection is at the same elevation as the bridle's connection to the vessel. Instrument connections that are higher up the bridle are reading less than the true level.

This problem also affects true level reading devices; e.g. radars. These devices read higher under these conditions since the trapped liquid is lighter than the vessel liquid. The surface in the bridle is pushed higher than the true surface in the vessel. This same problem also affects magnetic gauges.

7.7 Emulsions and Foams

Agitation induced emulsions are difficult to measure and control. Emulsions can occur with highly agitated liquids such as blowdown drums. Bridles and displacers often have non-representative liquids trap in them.

If the emulsion moves around a third tap for level glasses and positive buoyancy devices does not completely solve the problem. The emulsion midpoint can drift away from the third tap. This can be caused by level pulsations pumping a non-representative liquid into the cage. To correct this problem, the bridle or cage has to be periodically drained to reestablish the correct reading.

Another method would be to use a cage with multiple taps. Having a tap every 300 mm (1 ft) or so allows the cage and the vessel to transfer emulsions readily. This helps to significantly reduce the error that occurs with emulsions.

Foam is also a problem. The presence of foam can affect the operation of vessel trays and distributors. More significantly it can enable liquid to escape through the drum vapor outlet and affect downstream process equipment such as compressors.

Provided by : www.spic.ir

Copyright American Petroleum Institute

Specific Gravity - Temperature Relationship For Petroleum Oils

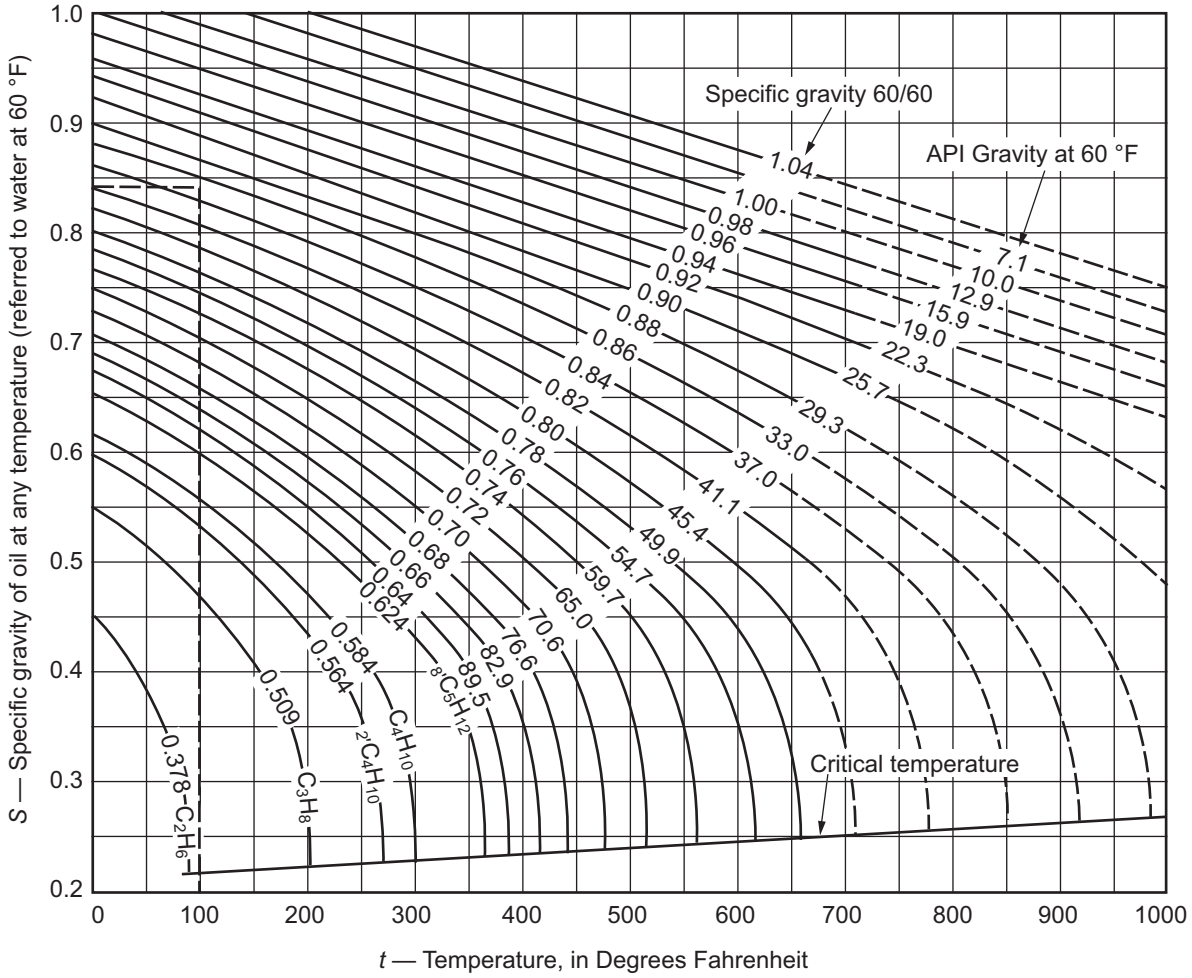

Typical Specific Gravities

Liquid	*SG*	*Liquid*	*SG*	*Liquid*	*SG*
Ethane	0.38	Naphtha	0.72	Heavy Gas Oil	0.90
Propane	0.51	Decane	0.73	Benzene	0.90
Butane	0.58	Diesel	0.82	Vacuum Gas Oil	0.91
Pentane	0.62	Kerosene	0.82	Water	1.00
Hexane	0.66	Crude 35.6 API	0.85	Fuel Oil No. 6	1.08
Heptane	0.69	Crude 32.6 API	0.86	Bunker C	1.08
Octane	0.71	Jet Fuel	0.88	Road Tar RT-12	1.15
		Light Gas Oil	0.89		

Figure 43—Specific Gravity–Temperature Relationship for Hydrocarbons

Provided by : www.spic.ir

Copyright American Petroleum Institute

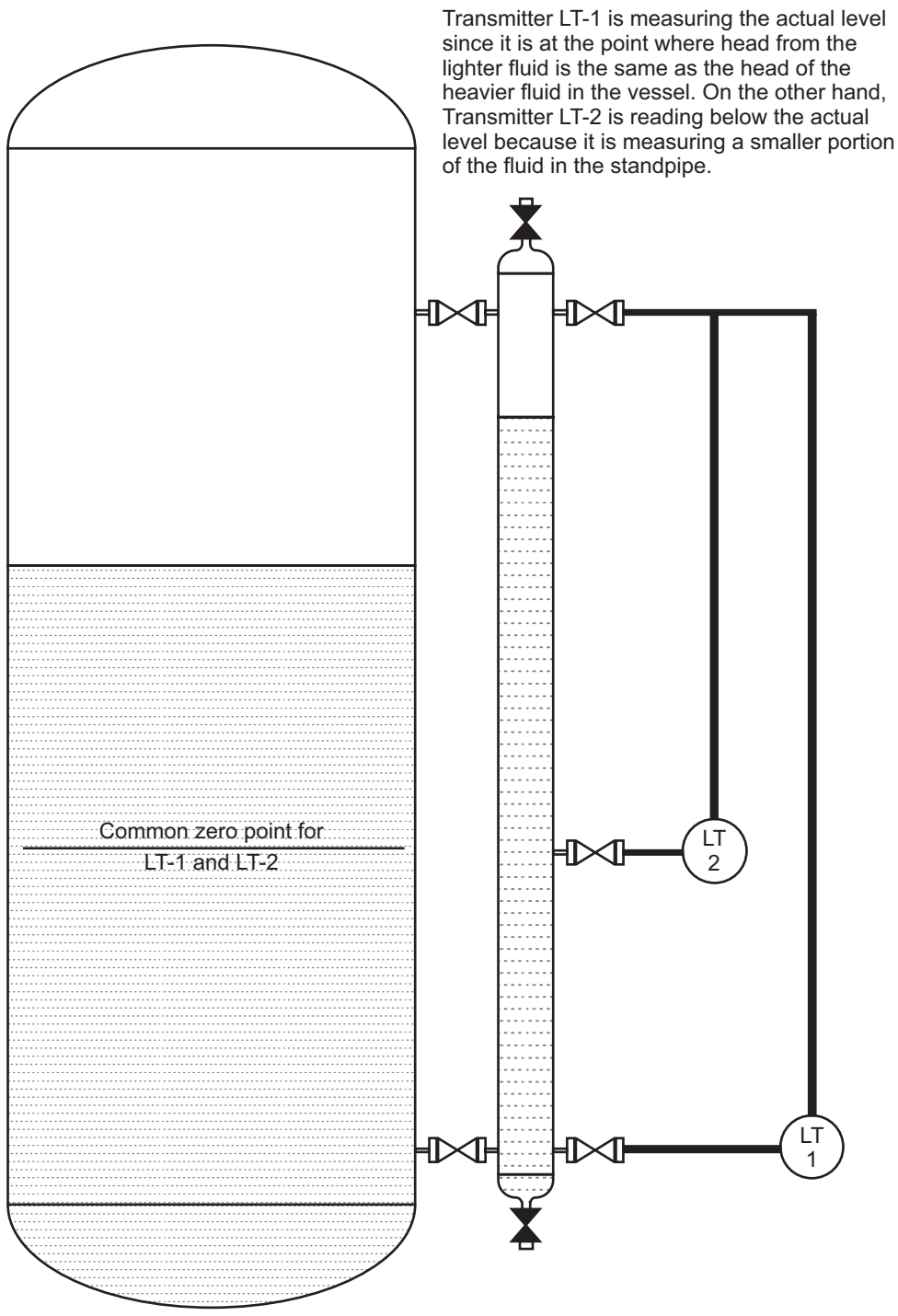

Figure 44—Liquid Communication with Non-Homogeneous Fluids

Provided by : www.spic.ir

Copyright American Petroleum Institute

Foam detection can require two different measurement technologies. One transmitter such as a differential level transmitter would be immune to foam. The second device such as GWR transmitter would be a device affected by the foam. Another approach would be to install a point sensitive device that detects foam as it pass the vapor disengagement section in the vessel. Thermal conductivity or capacitance is often used.

The foam has to have a characteristic that can be detected such as high dielectric, absorbs microwave energy or high hydrogen content. The dielectric of the foam significantly affects its ability to be detected. Hydrocarbons have low dielectrics so radar and capacitance probes are not effective with these services.

8 Instrument Installation

8.1 Introduction

This section covers the basics of instruments installation; such as mounting and accessibility. It also covers the connections to process lines and the design of instrument impulse piping. Otherwise, the requirements specific to a technology are in its associated section.

8.2 General Requirements

The first block valve should conform to the process pipe specifications and it should be located immediately after the pipe tap. The valve size should be ≥ 3/4 in. The exception is connections to standard ASME B16.36-2009 orifice flanges which are 1/2 in. NPS.

Full bore block valves should be used in liquid services to avoid trapping gas bubbles inside the valve structure or to avoid trapping liquid in gas services.

Preferably, each instrument has its own process tap. However, when multiple instruments are manifolded from a single process tap, separate block and bleed valves should be provided at each instrument.

Except for pressure gauges, the connection on a process instrument is generally a 1/2 in. female NPS threaded connection. For connections smaller than 1/2 in., the size should be increased at the instrument. One of the following methods can be used:

— a reducing adapter fitting;

— an instrument two bolt flange;

— tubing to reduced NPT fitting.

8.3 Process Connections

8.3.1 Instrument Installation

Below are guidelines pertaining to instrument installation.

a) Impulse lines should be kept as short as possible. Long tubing runs tend to degrade the measurement performance and contribute to impulse piping problems.

   For close coupled transmitters, impulse tubing should be 1 m (3 ft). See ASME MFC-8M and ISO 2186 for limits on impulse line lengths.

b) A vent valve should be provided next to each instrument. The vent valve can be a separate valve, part of an instrument manifold or a bleed valve independently threaded into the instrument.

Provided by : www.spic.ir

Copyright American Petroleum Institute

Regardless of the valve arrangement, the fluid should be routed safely away from the instrument and the individual operating it.

c) Process measurements should not to be piped into control buildings. Rather, the measurements should be transmitted electronically or pneumatically.

d) For differential pressure measurements (e.g. flow, level, density) it is important that the liquid/gas interface occur at the same elevation on both impulse lines or have been accounted for in the calibration.

e) Externally mounted level instruments and temperature elements are preferred since they permit online replacement. Internally mounted devices are usually limited to situations where external devices are completely ineffective.

f) Temperature sensors should be placed in continuously flowing streams, not in stagnant pockets such as a control valve bypass.

g) For flammable liquids (e.g. propane) that vaporize at ambient conditions, throttle bushings or tube fittings with a 3 mm ($^1/_8$ in.) orifice threaded into the root valve outlet are recommended to limit the material being released upon failure.

h) If the process temperature exceeds the instrument's temperature limits, un-insulated tubing should be provided to cool or heat the non-condensable gases or liquids inside the instrument to the ambient temperature. Typically, 180 mm (6 in.) is adequate.

i) Sensing points for pressure, differential, and level measurements should be located so that error from the fluid impact or the velocity effect is avoided.

j) The pressure measurement in two-phase flowing services that have a high percentage of liquids should be avoided. Where a measurement is necessary, it is best to use a tap on a vertical line, preferably with downwards flow and the instrument is mounted below the tap.

k) For liquid applications or impulse lines that require sealing liquids, filling tees should be provided at the process taps. This allows checking or replacement of the liquid in the impulse line.

l) To avoid damage to an instrument, it should be disconnected or vented prior to hydrostatic testing.

8.3.2 Above the Taps Mounting

Instruments in gas, slurry, and cryogenic services should be self-draining. The detail on the left side of Figure 45 shows a typical "above the taps" measurement. The impulse lines should be mounted above the process connection with a slope between 1:12 and 1:10 that runs downwards towards the process connection. This prevents liquid or particles from plugging the lines. On horizontal pipe, taps from 9:00 to 3:00 o'clock on the top of the line are recommended with the 12:00 o'clock position being preferred. See Figure 46.

Transmitter bodies should be orientated so liquids are not trapped inside them. It might be necessary to rotate the electronics to one side so the transmitter process taps point downwards. When this is not possible, a drain fitting should be provided at the lower part of the transmitter body flange.

Further, a vent should be provided at the highest point to allow the release of trapped vapors during startup and maintenance. This is preferably located at the high point on the transmitter body.

Provided by : www.spic.ir

Copyright American Petroleum Institute

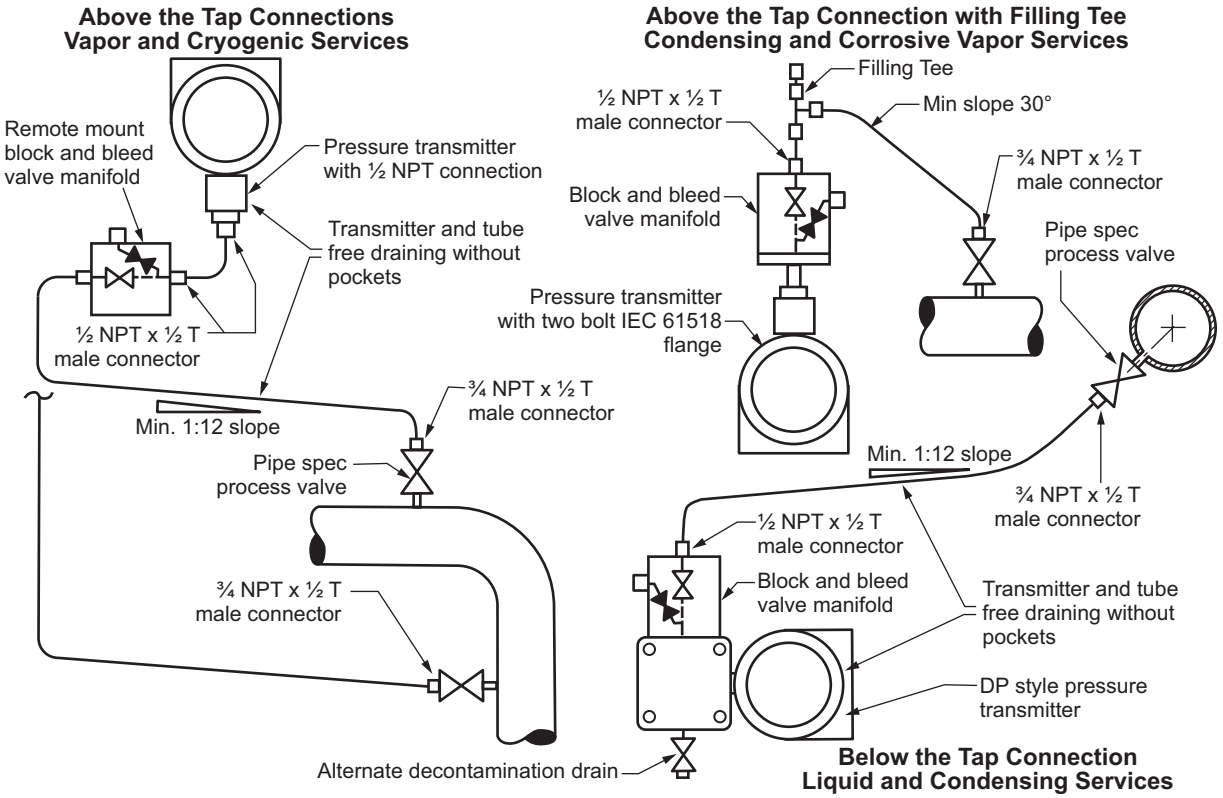

Figure 45—Pressure Transmitter Installations

8.3.3 Below the Taps Mounting

Instruments in single component condensing vapors, steam, or liquid services should be mounted below the taps. See Figure 46. The detail on the right side of Figure 45 shows a typical “below the taps” mounting. The impulse lines should continuously slope between 1:12 and 1:10 downwards and towards the instrument with the instrument at the low point. This prevents gas from being trapped inside the instrument or line. The slope should be increased if the liquid has a viscosity greater than two centipoises.

On horizontal pipe, it is recommended that taps from 5:00 to 7:00 o’clock be avoided. This avoids catching sediment and scale. Also taps from 9:00 to 3:00 o’clock should be avoided to prevent capturing incondensable vapors. For clean fluids, the preferred tap position is located 45° below the horizontal plane to eliminate the possibility of gas in the impulse lines. An alternate tap location is the horizontal plane. If a liquid has some solids content, then a position above the horizontal plane is recommended.

Transmitter bodies should be orientated so the vapors are not trapped inside them. It might be necessary to rotate the transmitter so the process taps point upwards. Otherwise, a vapor purge or bleed fitting should be installed on the upper part of transmitter body flange. A drain should be provided to allow removing the liquids prior to maintenance. Preferably, the drain is located at the rear of the transmitter.

Instruments measuring steam and similar high temperature condensing vapors can be mounted above the line or vessel nozzle. The instrument should be located so that it is downstream and below a high point in the impulse line. This ensures that condensate or a fill fluid is held in the instrument body providing protection. The impulse line upstream of the high point should be free draining back into the process.

Provided by : www.spic.ir

Copyright American Petroleum Institute

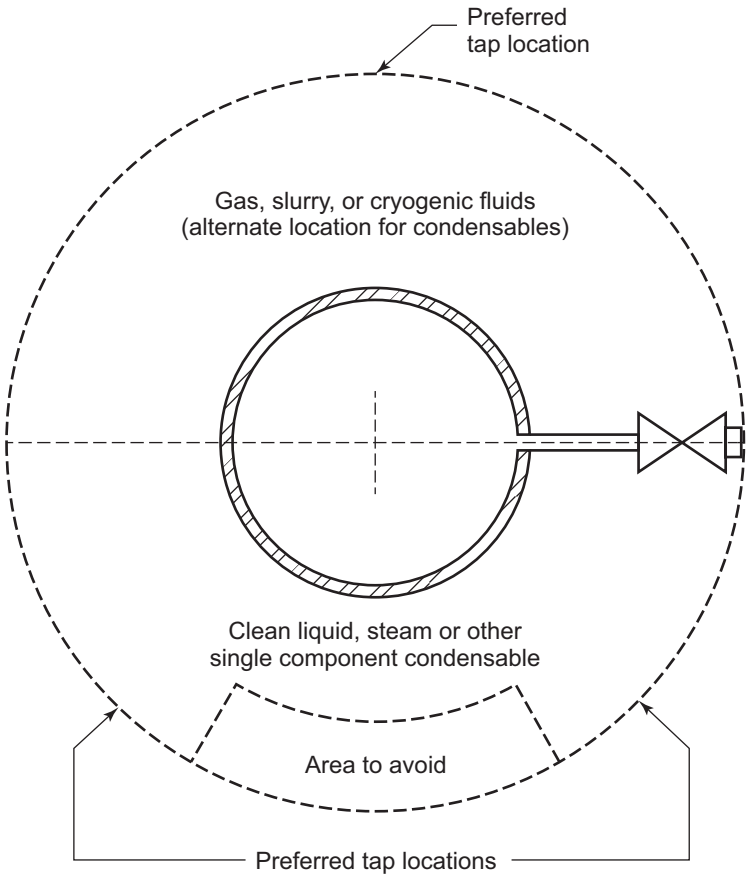

Figure 46—End View of Horizontal Pipe Taps

8.3.4 Instrument Pots and Reservoirs

To avoid measurement errors, instrument pots or reservoirs are used when the differential pressure change is small compared to the vertical liquid displacement in an impulse line. If the swept instrument volume such as with a bellows meter or manometer is greater than 16 cc (1.0 cu. in.), seal pots should be considered. The seal pot capacity should be larger than the volume displaced in the instrument. Also, the seal pot inside diameter should remain constant over the vertical displacement.

It is advisable to use steam condensation chambers that have a capacity two to three times that of the instrument, particularly when large and sudden variations in the flow can occur. For condensation chambers installed in vertical pipe, it is necessary to have both chambers installed at the same level, preferably by the higher tap.

Because they have minimal diaphragm movement, seal pots generally are not necessary for differential transmitters. A $^{1}/_{2}$ in. pipe or tubing tee or cross has sufficient volume to maintain a constant head. Condensation chambers for transmitters in steam service consist of a tee and a short length of un-insulated vertical tubing.

For transmitters, a possible exception exists for using chambers with high pressure or hydrogen services where gas tends to dissolve into the seal fluid; e.g. a hydro-cracker. Otherwise, upon depressurizing, the seal fluid could de-gas and foam causing it to overflow into the process line. They are also recommended for steam headers with pressure swings that could flash the condensate.

Conversely, with remotely mount instruments that are not mounted correctly with regards to the process tap, settling chambers, liquid dropout, or vapor instrument pots have been used. See Figure 47. They need recurring maintenance, so the use of these pots is not recommended. Rather, a close couple installation at the correct location

Provided by : www.spic.ir

Copyright American Petroleum Institute

and with the correct slope relative to the process tap is preferred. A transmitter with diaphragm seal can also be used, provided its elevation does not drop the pressure in the transmitter below the fill vapor pressure.

8.3.5 Two Phase Flow in Impulse Lines

Instruments with long impulse lines and a condensing vapor can experience noise producing, two phase slug flow. This occurs in long differential measurements but differential pressure flow transmitters can be affected as well. For instance this occurs on with flow transmitters located on the discharge of process compressors.

Differential pressure instruments across column trays or packed beds should be mounted above the top process connection. However, provisions should be made to prevent refluxing in long impulse lines that have vapors that are near their saturation pressure and have process temperatures above ambient. This results in slug flow which produces an unusable measurement. For example distillation columns frequently experience this issue.

Depending on factors such as accuracy, the amount of zero elevation possible, heat transfer, and the effects on the process, the following methods may be considered.

a) Use two pressure transmitters to eliminate the long impulse lines.

b) Insulate the impulse line to reduce the condensation rate.

c) Heat trace the line above its vaporization temperature.

d) Purge the impulse line with non-condensable gas.

e) Provide a differential transmitter with diaphragm seals.

f) Mount the transmitter at the lower tap and provide a seal leg.

g) Increase the line size to 2 in. so annular flow occurs.

Two transmitters, either gauge or absolute type, electronically handle condensing issues with the impulse piping or the temperature errors associated with long capillaries. They also eliminate the need for heat tracing and purging. They provide pressure readings from the top and bottom of the tower.

There is an integrated solution that uses a primary instrument and secondary instrument architecture. The system provides a synchronized measurement and uses only one input. This eliminates errors that can occur with systems that sample at slower intervals. Nevertheless, with both dual sensor approaches higher pressures, typically greater than 1.03 MPa (150 psig) can have unacceptable uncertainties so conventional differential pressure measurements would be required.

Another solution increases the impulse size to obtain annular flow. For long runs measuring differential pressure across towers, $1^1/_2$ and 2 in. pipe has been used. Figure 48 shows two mounting configurations for measuring differential with condensing vapors.

Diaphragm seals can be considered but they can be unacceptable for differential pressure services when they are measuring a small span over long runs. Liquid seals are affective, but for differential across tall columns, the amount of zero elevation required can result in selecting a higher range transmitter with less accuracy. Also, long liquid seal runs are sensitive to slight variations in density. In exceptional situations the combination of zero elevation and span might not be possible. See 3.3.3 concerning span limits.

Also, insulation and tracing can be considered. However, it should be understood that if steam tracing is used and it has a temperature less than the process conditions then cooling occurs. Just increasing the amount of insulation is more effective.

Provided by : www.spic.ir

Copyright American Petroleum Institute

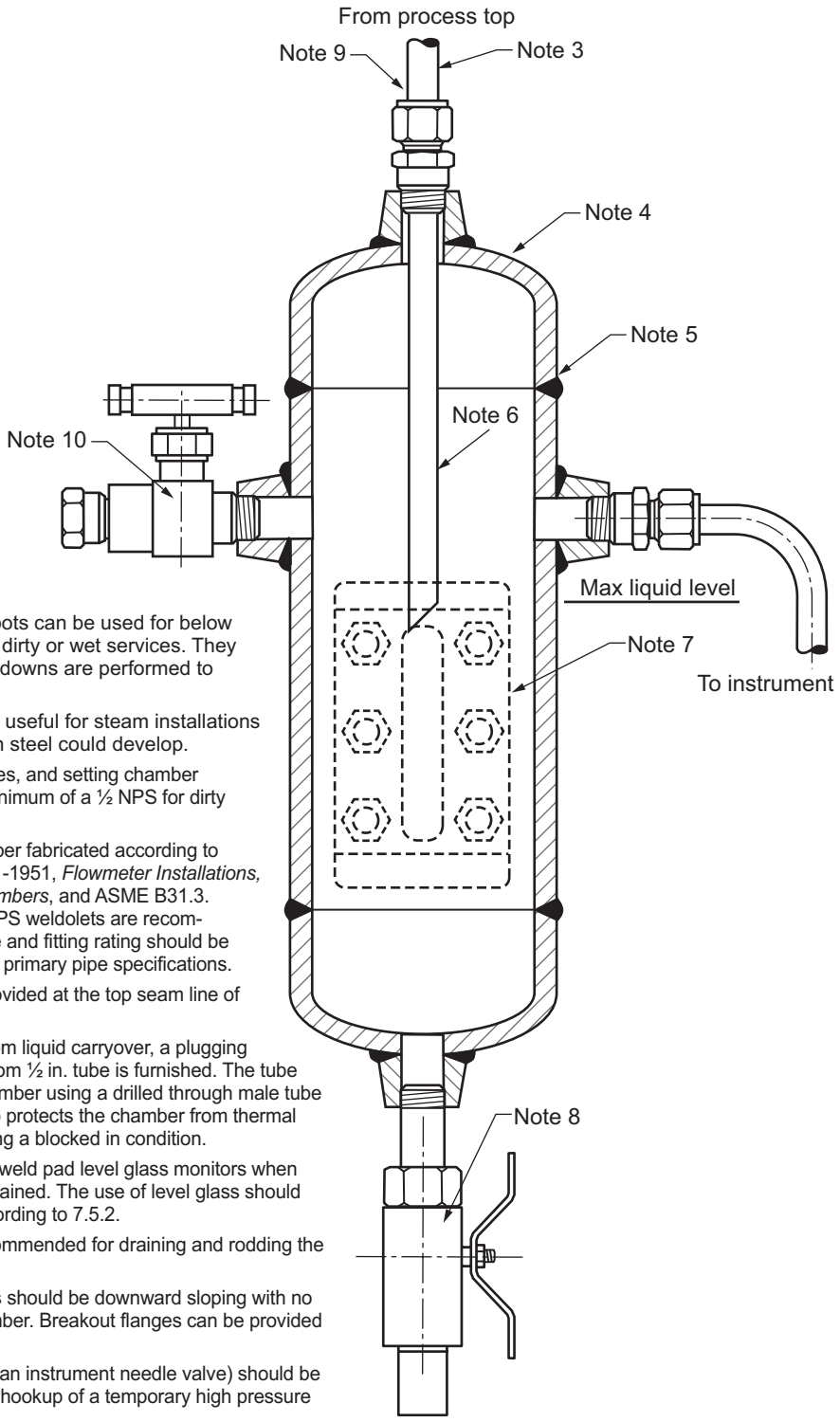

NOTE 1 Setting chambers or drip pots can be used for below the traps measurement in dirty or wet services. They are also useful when blowdowns are performed to remove solids.

NOTE 2 Setting chambers are also useful for steam installations where scaling from carbon steel could develop.

NOTE 3 Pressure taps, lead line bores, and setting chamber connections should be a minimum of a ½ NPS for dirty liquids and gases.

NOTE 4 A 4 NPS vertical seal chamber fabricated according to figure RP3.3.4 of ISA RP3.1-1951, *Flowmeter Installations, Seal, and Condensate Chambers*, and ASME B31.3. Welded pipe caps and ½ NPS weldolets are recommended. The pipe schedule and fitting rating should be according to the associated primary pipe specifications.

NOTE 5 Cleanout flanges can be provided at the top seam line of the chamber.

NOTE 6 To protect the instrument from liquid carryover, a plugging or outage tube fabricated from ½ in. tube is furnished. The tube fitting is attached to the chamber using a drilled through male tube fitting. The outage tube also protects the chamber from thermal expansion of the liquid during a blocked in condition.

NOTE 7 A one section, Size 1 reflex weld pad level glass monitors when the chamber needs to be drained. The use of level glass should be evaluated for safety according to 7.5.2.

NOTE 8 Full port ball valves are recommended for draining and rodding the settling chamber.

NOTE 9 To ensure draining, the lines should be downward sloping with no pockets to the settling chamber. Breakout flanges can be provided along the line for cleaning.

NOTE 10 A multi-turn vent valve (e.g. an instrument needle valve) should be provided for blowdown or a hookup of a temporary high pressure blowback.

NOTE 11 The chamber is preferably mounted close to the process taps to limit the possibility of blockage, but installation next to the measurement device is acceptable.

Figure 47—Settling Chamber

Provided by : www.spic.ir

Copyright American Petroleum Institute

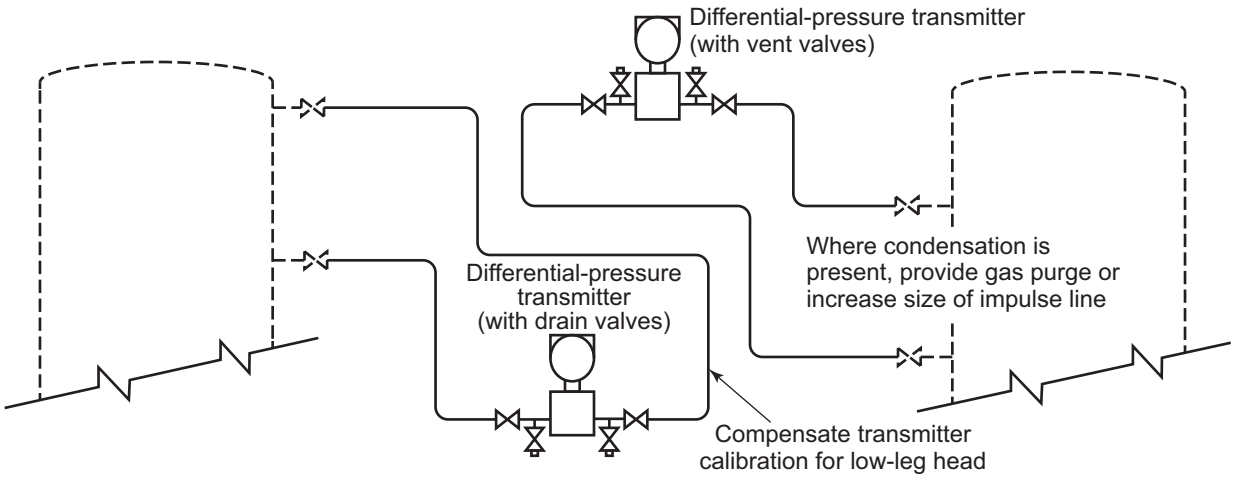

Figure 48—Differential Pressure Measurement

Often times the more effective solution and sometimes the only solution is providing a purge using a non-condensable gas; such as nitrogen or pilot gas.

8.4 Connection Lengths

Close Coupled instruments are supported by the pipe on a stand with a short section of tubing connecting it to the process.

Remote Mounted instruments are conveniently mounted for easy access or to protect them from adverse conditions; e.g. vibration.

Tightly Coupled instruments are supported by the process tap with a fitting-to-fitting installation or a minimum of pipe is used.

Except for condensing services, temperature conduction to an instrument normally is not an issue. Based upon heat transfer rate of 8.1 watt/m^2/hr^2/°C (1.44 BTU/Ft^2/hr/°F), an un-insulated 150 mm (6 in.) section of stainless steel tubing between the process and the instrument is usually adequate for temperatures up to 540 °C (1000 °F) for both liquids and gases.

8.4.1 Close Coupled Connections

Generally, the most effective installation is achieved by line mounting the device as close to the process connection as practicable. This allows shorter tubing, reduces heat tracing, and limits liquid head problems, plus eliminates vapor and liquid traps as well as reducing the possibility of leaks and plugging. Ideally, an installation would fit inside a 600 mm (2 ft) square box.

8.4.2 Remote Connections

The same degree of access should be provided for the process isolating valves as the instrument has. So for remote connections where the process block valve is not readily accessible by the instrument, an additional block valve and a bleed valve should be installed.

The problem with remote connections is that the specific gravity deviation from dilution or uneven temperatures over long distances significantly affects the process measurement.

Provided by : www.spic.ir

Copyright American Petroleum Institute

Close coupled and tightly coupled installations require remote indictors for operating valve bypasses. With remote connections, local indicators can be integral with the transmitter. Still, this is the least preferable connection type.

8.4.3 Tightly Coupled Connections

Stem or nipple mounting is acceptable provided that instrument vibration or the strength of the root connection does not become a problem. Stem mounting has been used in offshore facilities with favorable results.

Still items supported entirely by a process connection should be limited to a single device such as a transmitter.

8.5 Instrument Access

8.5.1 General

In the past, easy maintenance access was the main factor in determining instrument locations. This resulted in long impulse lines plus additional ladders and platforms. Further, access to equipment was reduced.

A balance needs to be struck between access for instrument maintenance and space utilization for other purposes; e.g. emergency egress, major equipment access, and removal. Instruments should not block walkways and they should be removable without disassembly of process pipe or impulse lines.

Improvements in mean time between failure (MTBF) as well as remote diagnostics and configuration have significantly reduced the maintenance at the device. This is particularly true with the development of plugged tap diagnostics. Regardless, installations should still have enough space to allow replacement of an instrument without interrupting normal process operations.

8.5.2 Easy Access

A device has "*Easy Access*" if it is located within 0.5 m ($1\frac{1}{2}$ ft) horizontally from a walkway or a platform. Also, it is not more than 1.6 m (5 ft, 3 in.) above grade or a platform. There should be no obstructions and the location has unrestricted access while operating. Items such as field panels and junction boxes are typically located for "*Easy Access*."

8.5.3 Normal Access

An instrument has "*Normal Access*" if it is located within 1.0 m (40 in.) horizontally from a walkway or a platform. Also, it is not more 6 m (20 ft) above grade or 2 m ($6\frac{1}{2}$ ft) above a platform and can be safely reached by using a mobile platform or ladder. Instruments should be located no farther than 0.5 m ($1\frac{1}{2}$ ft) from fixed ladders to permit maintenance from the ladder.

For maintenance purposes, rolling platforms or powered lifts can be used when free access is available below the instruments. It is recommended that power lifts be easily available for the upkeep of instruments. These devices can extend the envelope of "*Normal Access*" significantly.

Instruments requiring occasional attention should have "*Normal Access.*" To keep the impulse piping to less than 1200 mm (4 ft) or to meet the requirements of ISO 2186 and ASME MFC-8M "*Normal Access*" should be used and even "*Limited Access*" should be considered.

8.5.4 Limited Access

A device has "*Limited Access*" when it can only be reached during plant operation by installing temporary facilities such as scaffolding or using cranes.

Provided by : www.spic.ir

--`,,,`````,`,`,```,,`,`````,-`-`,,`,,`,`,,`---

Copyright American Petroleum Institute

A device is also considered to have "*Limited Access*" if it can only be reached after removal or disassembly of other components (such as thermal insulation, equipment noise hoods, etc.) or excluding administrative overhead (e.g. obtaining work permits) requires more than a plant shift to achieve access.

The following devices do not require everyday accessibility; i.e. "*Limited Access*" is acceptable:

a) temperature elements, ≤315 °C (600 °F) in non-coating and non-coking services;

b) configurable temperature transmitters;

c) inline flow meters with remote electronics;

d) configurable pressure transmitters in clean liquid and non-condensing services.

8.6 Impulse Line Installation

8.6.1 Impulse Line Specifications

Process specific instrument piping specifications should be used. The basic requirements of the associated process pipe specifications (e.g. alloys) needed should be followed when developing the instrument piping specifications. This ensures that the material selected for the installation details are suitable.

Several instrument piping specifications are usually necessary. A cross reference to the process line specifications needs be developed to ensure correct material selection. See PIP PCSIP001, for instrument tubing specifications. Also see PIP PCCIP001, for detailed instructions on how to route and install impulse lines.

8.6.2 Pipe Installation

When pipe is used, $^{1}/_{2}$ in. Schedule 80 or heavier pipe should be used. Pressure gauges and other tightly coupled installations should use $^{3}/_{4}$ in. pipe.

According to ASME B16.11, threaded fittings 3000# have the same pressure and temperature rating as Schedule 80 pipe, while 6000# fittings have the same ratings as Schedule 160 pipe. However, to avoid confusion and simplify stocking it is recommend that one class of fitting and nipple be used.

Except for brass fittings, all threaded pipe joins require a thread compound. Pipe thread sealant should be suitable for the expected temperatures and not contaminate the process. Besides preventing leaks, a tread sealant should prevent galling and allow the joint to be easily disassembled. Organic sealants should not be used with oxidizers. TFE tape is not recommended because it finds its way into the process. See API 5A3 for more information on selecting thread compounds.

Two groups of threaded fittings exist. First there are ASME B16.11 standard fittings. This standard is augmented by ASTM A733, *Pipe Nipples*, and MSS SP-95, *Swage Nipples and Bull Plugs*. These are generic fittings that are made by forging and typically have ASME B1.20.1 threads.

Second, there are the SAE style fittings that are made by machining. By following ASME B1.20.3/SAE J476 requirements, they have tighter thread tolerances and they have higher pressure ratings. The variety of fittings is wider. Among the most useful are adapter fittings that allow the transition to different threading systems. They are also effective in managing the change of an instrument connection to a larger impulse line.

Shaped products such as elbows, tees, and crosses are hot forged and machined, while straights are manufactured from bar stock. Where applicable, these products are made according to the design criteria of the Society of Automotive Engineers Standards, SAE J514 and J530. These fittings are available from tube fitting vendors.

Provided by : www.spic.ir

Copyright American Petroleum Institute

ASME B16.11 Hex style bushings should be avoided. They can be easily deformed. B16.11-2011 cautions against their use “where they might be subject to harmful loads and forces other than internal pressures.” ASME B16.11-2011 flush bushings are not recommended for similar reasons. Rather, a tapped hex bull plug where the female and male threads do not overlap is recommended (see Figure 49). This ensures that adequate pipe wall exists along the length of the fitting.

Flush or Hollow Hex pipe plugs should be avoided as well, particularly when there is a potential for galling. Otherwise, the risk exists that the Allen wrench slot could become rounded and it would not be possible to remove the plug.

Instrument installations on steam boilers do not need to meet ASME BPVC Section I requirements if they are located downstream of a valve that meets Section I requirements. See ASME B31.1-2012 paragraph 122.3 for the complete design requirements for instruments.

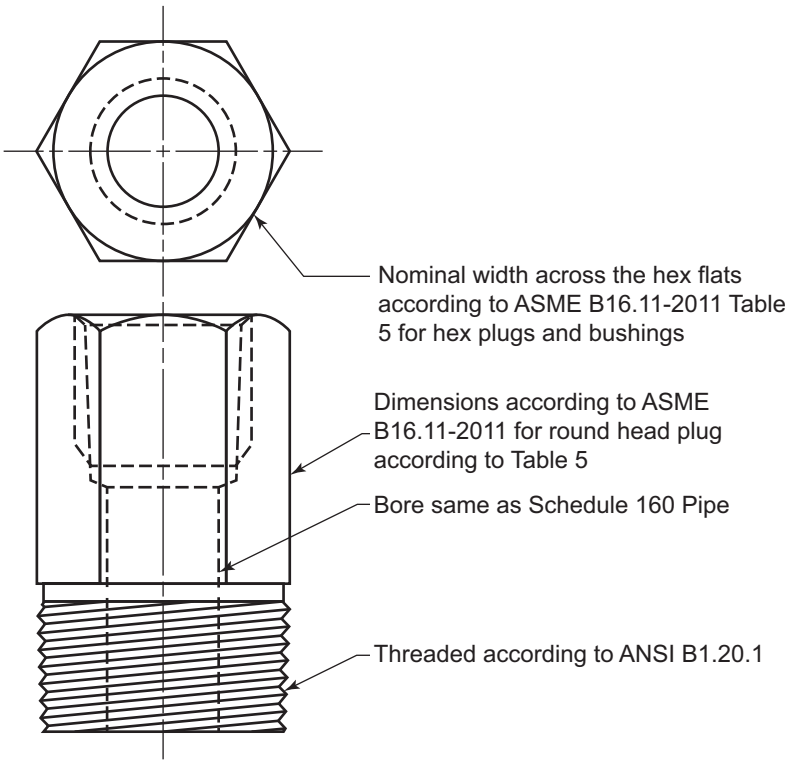

Figure 49—Tapped Hex Head Bull Plug

8.6.3 Pipe Unions

Pipe unions range in size from $^{1}/_{8}$ in. to 3 in. They are available with male and female threaded connections as well as socket and butt weld ends. Different end connections can be combined.

Standard MSS SP-83 ground joint pipe unions typically are avoided due to their tendency to leak. They use tapered metal-to-metal seats that are formed by lapping. If their is surface not perfect, fluids can escape. During installation, the surfaces can be scored by tools or grit. While in use, vibration, pressure surges, and flexing can wear the seats or loosen the union nut to the point that seeping results.

Also, unlike compression fittings, the degree of thread engagement cannot be validated. Further, since different seat patterns exist interchangeability can be an issue.

Provided by : www.spic.ir

Copyright American Petroleum Institute

However, unions are useful in small bore piping systems. They have the following advantages:

— hold restriction orifices;

— allows disassemble of ridged small bore pipe;

— orientate and align equipment;

— unlike flanges, available for $^{1}/_{8}$, $^{1}/_{4}$, and $^{3}/_{8}$ pipe;

— light weight and compact.

For these situations, modified pipe unions are available with o-rings. These fittings are resistance to vibration since flat mating surfaces are used and less flexing occurs. The o-ring seals continuously adjust to the microscopic movements. The o-ring is located in the face, protecting it from abrasion and erosion by the process.

They have similar sealing characteristic to two bolt instrument flanges and can seal to 300 °C (570 °F). They are available in MSS SP-83, 3000 and 6000 lbs configurations. Also, proprietary versions with higher operating pressures are available.

For higher temperatures, MSS SP-83 style unions with spiral wound gaskets are available to provide a leak-tight joint. Gaskets with either graphite or PTFE fill are available.

8.6.4 Tubing Installation

Flareless, double ferrule, compression tube fittings have become the standard instrument fitting. For hydraulic systems, SAE 37° flared fitting are typical but flareless fittings can be used in hydraulic services as well and are recommended for maintaining commonality. Lastly, API 6A Type III high pressure, coned fittings (see Figure 50) are available for pressures to 138 MPa (20,000 psig) with NACE ratings. Some versions are rated in excess of 414 MPa (60,000 psig) without the API designation. Welded pipe should be considered for gases above 13.8 MPa (2000 psig).

Tube fittings are less prone to leak than pipe. There are fewer threaded joins to leak. Tube fittings do not have the thread engagement issues that affect pipe. Much less field threading is needed. Tube fittings and connections on an instrument have consistent threads that conform to ASME B1.20.3/SAE J476 which is a dimensionally more precise specification than ASME B1.20.1 which is used for normal pipe threading.

Material take-offs are simpler since extra elbows and the like are not need to avoid obstructions. Further, tube elbows can face in any direction while pipe requires a union or rotating an elbow up to a full turn away from the position of maximum thread engagement. The former is usually prohibited and the latter can result in leaks. Also, joins are easily broken without affecting the entire installation.

Special tube fittings are also available. For instance, a weld connector tube fitting is available. This fitting is used as straight section pipe for use with standard butt weld pipe fittings or can be inserted into a socket weld pipe fitting. Tube stub adapters can be used to provide non-standard connections on stock fittings and are often necessary for increasing or decreasing a fitting by more than two sizes. Further, port connectors are available that enable fitting-to-fitting make up. Terminology in ISA RP42.00.01, *Nomenclature for Instrument Tube Fittings*, should be used to specify these fittings.

The manufacture can machine away the internal shoulders of the fitting so a tube or sheathed thermocouple can pass completely through it. This allows the fitting to be used as a transition through a pressure boundary. See Figure 47. These fitting are also useful for installing dip tubes.

Standard tubing with an outside diameter of $^{3}/_{8}$ in. or $^{1}/_{2}$ in. and a minimum wall thickness of 0.90 mm (0.035 in.) is generally used. Half inch 0.90 mm (0.035 in.) stainless steel tubing is acceptable to 17.9 MPa (2600 psig) at 93.3 °C

Provided by : www.spic.ir

Copyright American Petroleum Institute

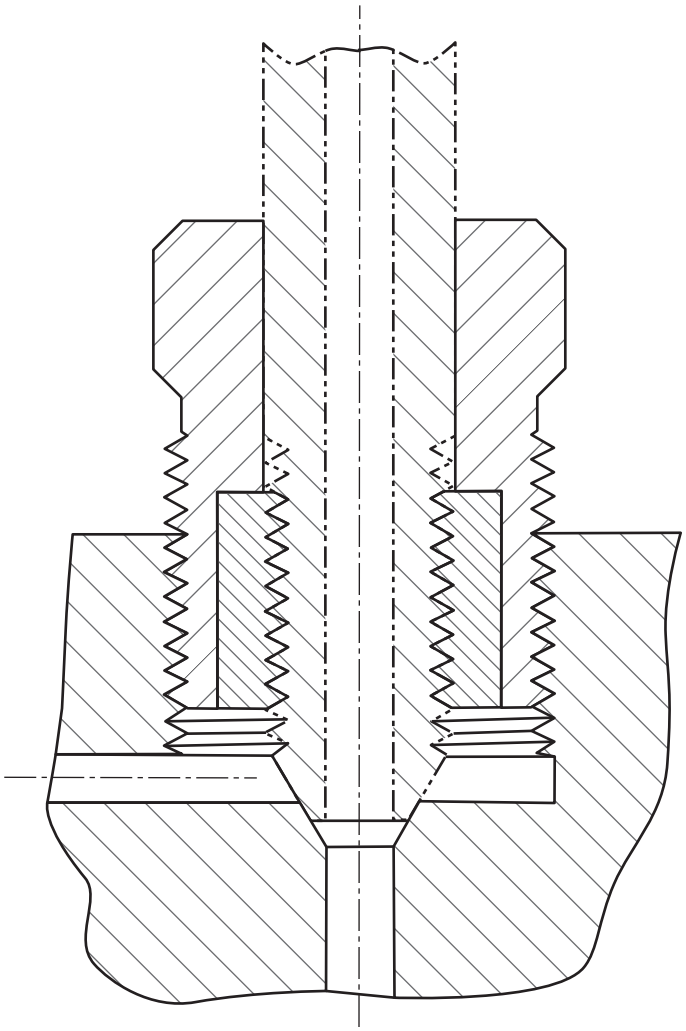

Figure 50—API Type III High-pressure Tube Fitting

(200 °F) and 1.25 mm (0.049 in.) is rated for 25.5 MPa (3700 psig.) The pressure rating declines to 14.2 MPa (2054 psig) and 20.2 MPa (2923 psig) respectively at 425 °C (800 °F).

Bends rather than fittings are used to change direction. A tube bender of the correct radius should be used and the bend should be made at an appropriate distance from the tube fitting. According to ASME B31.3, the minimum radius allowed is equal to the tube diameter but 3D is more typical.

Tube bending, including non-circularity, should meet ASME B31.3 requirements. Further, the tube wrinkle depth on the inside of a bend should be ≤2 % of tube outside diameter for sizes ≤$^3/_4$ in. and for tubes >$^3/_4$ in. ≤1 % of the diameter. Tube wrinkle depth should be considered as the perpendicular distance from the wrinkle bottom to the arc that connects adjacent crests. Scratches or die marks should not be greater than 5 % of the wall thickness.

Tubing larger than $^1/_2$ in. or a wall thickness greater than 1.25 mm (0.049 in.) should be avoided. It is difficult to bend and special tools are needed. Hydraulic swaging units and bench benders are recommended for wall thickness greater than 1.25 mm (0.049 in.).

Provided by : www.spic.ir

Copyright American Petroleum Institute

Tube walls ≥1.25 mm (0.049 in.) can result in compression fittings not properly being tightened which has resulted in blowouts. A heavy-wall tube resists the ferrule swaging action; instead the ferrules create surface imperfections that become leak paths.

The tubing material should be softer than fitting material. For example, stainless steel tubing should not be used with brass fittings. Conversely, ferrules do not form properly when used with material that is too soft. The tubing should be fully annealed (i.e. the correct hardness) for the ferrules to swage properly. Also, stainless steel is susceptible to galling or cold welding so the use of silver plated ferrules is recommended to above 232 °C (450 °F).

Tubing surfaces with depressions, scratches, raised surfaces, or other defects do not seal properly, especially with gases. Light molecules, such as hydrogen, are able to migrate through microscopic leak paths.

In-line fittings, such as couplings, should be broken out of the common tubing plane by using 45° jogs to facilitate leak monitoring and to allow access to the fittings with tools. Fittings installed in adjacent tube runs should be staggered with respect to one another.

Three or less tubes that are running together and have the same metallurgy and similar temperatures can be joined for mutual support. Horizontal tubing support intervals should not exceed those shown Table 18. Tube saddles, support struts, etc. can be used for grouping tubes.

Table 18—Tubing Support

Tube OD		Tube Material	Max Horizontal Span	
mm (in.)			m (ft-in.)	
6	(1/4)	SS	0.9	(3-0)
10	(3/8)	SS	1.2	(4-0)
12	(1/2)	SS	1.5	(5-0)
20	(3/4)	SS	1.8	(6-0)
6	(1/4)	Copper	0.8	(2-7)
10	(3/8)	Copper	1.0	(3-3)
12	(1/2)	Copper	1.2	(4-0)
20	(3/4)	Copper	1.8	(6-0)

NOTE There should be support within 150 mm (6 in.) of a tube fitting and any change of direction. Vertical tubing should be supported no more than 1.5 times the maximum horizontal distance.

There should be a support within 150 mm (6 in.) of a tube fitting and any change of direction. Vertically tubing should be supported no more than 1.5 times the maximum horizontal distance. In cases where the supports cannot be provided at the recommended spans, tray or channel should be used to prevent deflections. Tube tray and channel should be appropriately supported according to the supplier's recommendations.

Burrs should be removed from piping and tube after cutting and blown clean of cuttings and other foreign material. Regardless of the wall thickness, every compression fitting should be checked with the manufacturer's inspection gauge.

Prior to commissioning, the entire installation should be checked with a surfactant based compound with the proper surface tension intended for leak checking. The requirements of ASTM E515-2011, Section 1.2.2 should be used as a guideline. In critical services helium leak checking could be necessary. Leaks down to 1×10^{-8} Std cm^3/s can be detected with Helium mass spectrometers. See ASTM E499-2011 for testing information.

Provided by : www.spic.ir

Copyright American Petroleum Institute

For more information concerning tube installation see EI Recommended Practice “Guidelines for the management, design, installation and maintenance of small bore tubing systems.”

8.6.5 Process Plugging

Where plugging is a significant problem, continuous purges should be provided for services. See 9.4 for information about using purge systems.

If occasional tap plugging occurs, full port root valves and pipe tees can be provided for rodding. See Figure 51 for an example of rodding tee. The instrument impulse line should connect to the tee’s side outlet at the 3 o’clock or 9 o’clock position. It is not practical to rod orifice plates that use standard corner taps.

The design of a rodding unit depends on the fluid and solid characteristics. Rodding often requires the use of larger pressure taps. However, taps sizes beyond the limits required by ASME MFC-3M for orifice meters and other head meters should not be used. See Figure 66.

Figure 52 shows a typical rodding device. The tip should be 0.23 in. ±0.01 in. diameter so it can easily pass through 0.250 in. ±0.01 in. flange tap for a 2 in. orifice run. Space should be left behind the instrument for the rodding device. For close quarters, a rod out devices with a flexible shaft is available. A ram type valve with an extended plunger can effectively clean taps as well.

At high pressures, hot tap machines can be used as rod out devices but they usually required additional space behind the tap and they are not applicable for taps smaller than 12 mm ($^1/_2$ in.).

Automatic rodding devices are also available. They clean the tap periodically before coatings become significant. The device uses a piston to drive the rodding tool into the tap. The rodding device is designed so that the instrument can remain in operation as it operates. The scrapper at the tip of the rodding device has bypass passage that provides a pressure bypass path to the other side of the scrapper.

8.7 Instrument Valves and Manifolds

Gauge and manifold valves are fabricated from bar stock or forged. They are available in a wide variety of materials but AISI Type 316 Stainless Steel is typically used. NACE construction is available. Their operating ratings are based upon the requirements of ASME B16.34, MSS SP-99 and MSS SP-105. The valves are typically rated to 41.4 MPa (6000 psig) at ambient conditions but ratings to 68.9 MPa (10,000 psig) are available. With an appropriate stem packing, operating temperatures of 540 °C (1000 °F) are possible.

Gauge and manifold valves provide simple compact installations. Instrument manifold valves provide in one device, a convenient method for blocking, venting, and calibrating instruments. See Figure 53 for examples of manifold valve types. Their use increases safety and reliability by reducing the number of connections.

Manifolds are the preferred mounting point. By connecting the manifold to the mounting stand, the transmitter can be removed at the two bolt flanges on the manifold without disturbing the impulse piping.

8.7.1 Needle Valves

Needle valves are used for isolating instrumentation from the process. The valves are bubble tight in both the seated and back seated positions. They also come with special taper tips for throttling service. They are available for $^1/_4$ in. to 1 in. pipe sizes. The needle valve and the instrument ball valve are the basic components for the creation of instrument manifolds.

Provided by : www.spic.ir

Copyright American Petroleum Institute

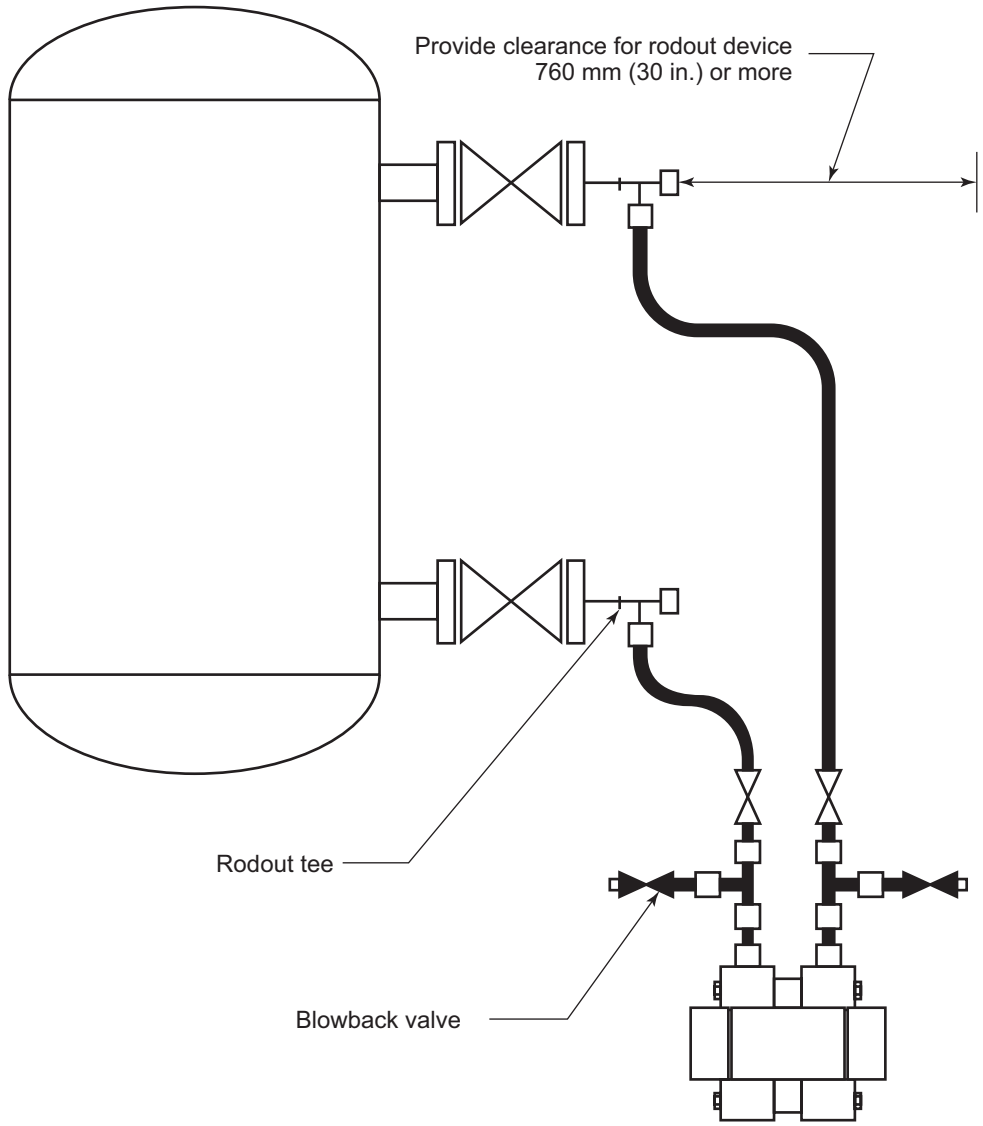

Figure 51—Rodding Tee's

8.7.2 Bleed Valves

Bleeders are compact valves with a 3 mm ($^1/_8$ in.) orifice that threads into a $^1/_4$ in. NPT port of a gauge valve or transmitter body. They are used for venting gas and liquids but since they do not have stem packing they should not be connected to pressurized lines. Since it has a hex head fitting on the end of the stem it requires an open-end wrench for operation. Using a removable stem allows a calibration fitting to be threaded in their place to enable transmitter adjustment. To allow better control of the fluid discharge they can be provided with vent tubes.

Standard bleeders do not have packing; rather, instead they rely on threads for sealing the stem when open. Since transmitter body flanges are symmetrical a two valve manifold can be installed on the rear body taps if better sealing is needed.

Provided by : www.spic.ir

Copyright American Petroleum Institute

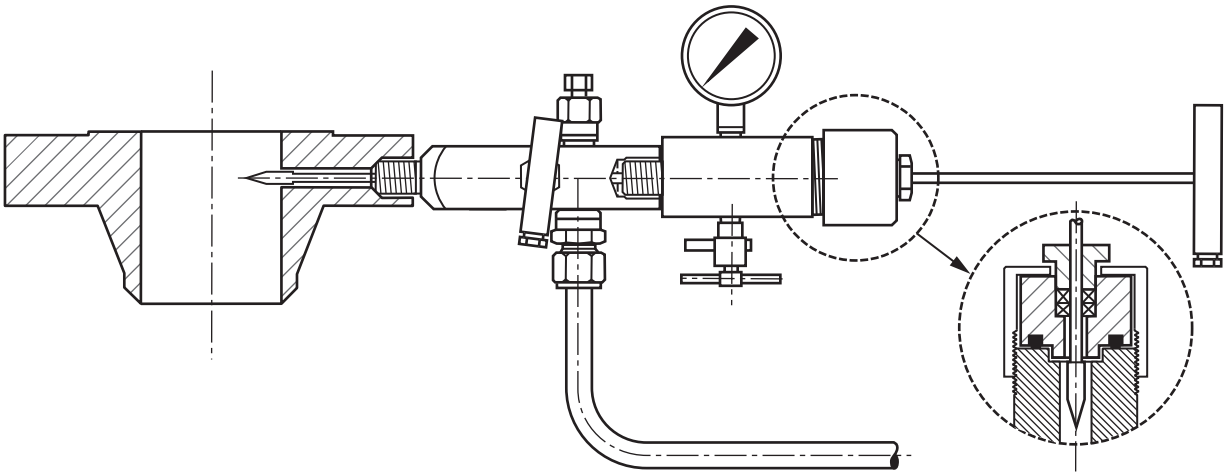

Figure 52—Typical Rodding Unit for Orifice Flanges

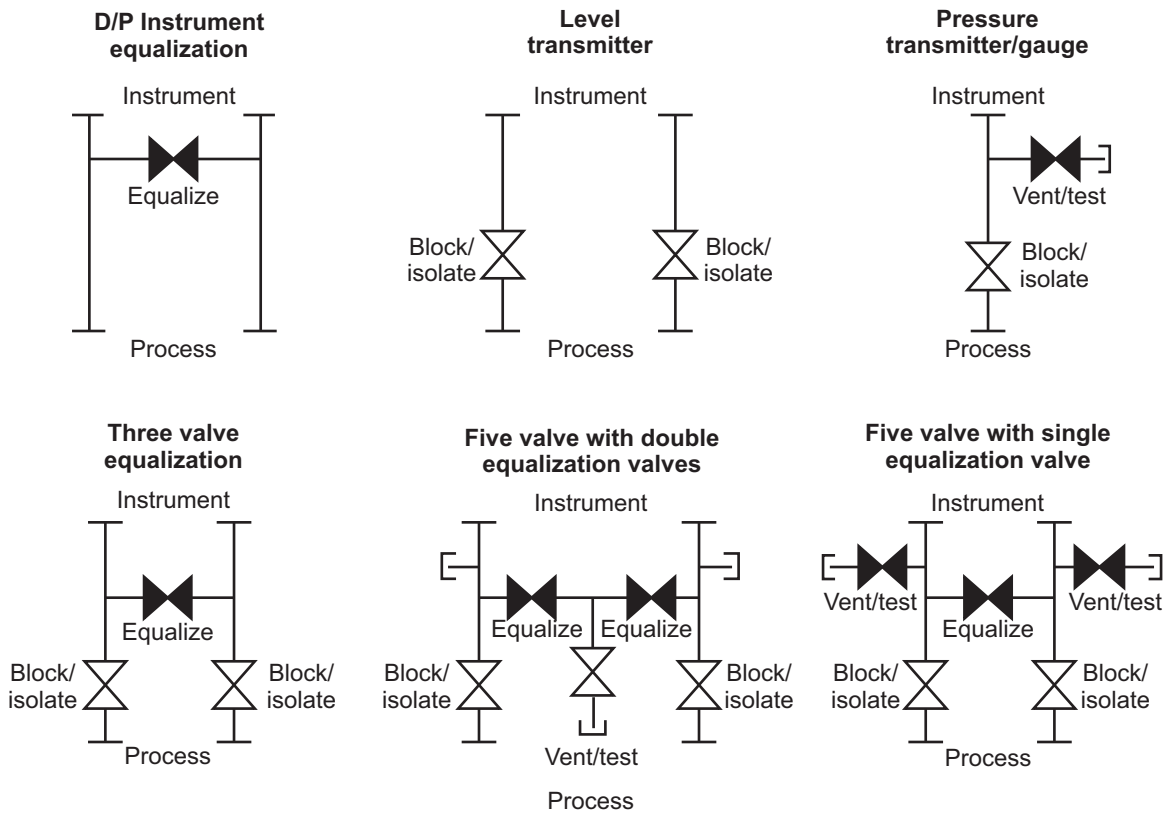

Figure 53—Valve Arrangement for Instrument Manifolds

Provided by : www.spic.ir

Copyright American Petroleum Institute

8.7.3 Manifold Valves

There are two valve body patterns used in valve manifolds. There is a straight through flow pattern with the flow running perpendicular to the stem. This pattern is based upon a plug valve or a ball valve. This pattern is useful for rod out services.

Also, there is the flow parallel to the valve stem pattern with a path similar to that in a globe valve. These valves have multi-turn rising stems and use needle, sold ball, and “washer” trim tips. They are also equipped with back seats to protect the packing. Rising stem valves have either rotating or non-rotating tips. To prevent galling and wear, the trim should be designed so rubbing does not occur as the valve seats.

Rising stem valves are available with screwed, union, or bolted bonnets. Bellows and cryogenic bonnets are also available.

Fluoropolymer packing is used up to 232 °C (450 °F) with graphite based packing for higher temperatures. Also, some valves use FKM o-ring seals rather than packing.

Both perpendicular and parallel patterns have soft and metal seats. Soft seats are fabricated from PEEK, POM, or one of the fluoropolymers.

8.7.4 Valve Handles

To promote correct operation the manifold valve bonnets can be color coded with ring labels. The following colors are used:

— blue are block valves;

— green are equalization valves;

— red are vent valves.

Anti-tamper removable valve handles are also used to prevent operating an incorrect valve. For instance this protects opening a flow meter bypass valve without closing one of the block valves.

8.7.5 Two Bolt Instrument Flanges

Transmitter and manifolds are connected using IEC 61518 Type B, two bold flanges or kidney flanges. The IEC 61518 flange pattern enables manifolds to use accessories such a purge manifolds. The default connection on a transmitter is 1/4 in., the two bolt flange is provided as the adapter to provide the standard 1/2 in. NPT connection. Two bolt flanges also serve as adapter for other types of connections, e.g. butt weld fittings, tube fittings, socket weld, etc. They also permit changing connection sizes without adding another joint.

Two bolt flange connections are also the basis for tightly couple flow modular systems used in pipeline metering. Instrument block valves are fabricated to this standard to enable tighter coupling. See Figure 54.

Two bolt flanges come with eccentric drillings. The eccentric drilling allows tight coupling to both 3 mm and 6 mm (1/8 in. and 1/4 in.) orifice plates using the same flange pair. When combined with eccentric nipples spans between 50.8 mm to 60.5 mm (2.00 in. to 2.38 in.) are possible in one sixteenth increments.

Provided by : www.spic.ir

Copyright American Petroleum Institute

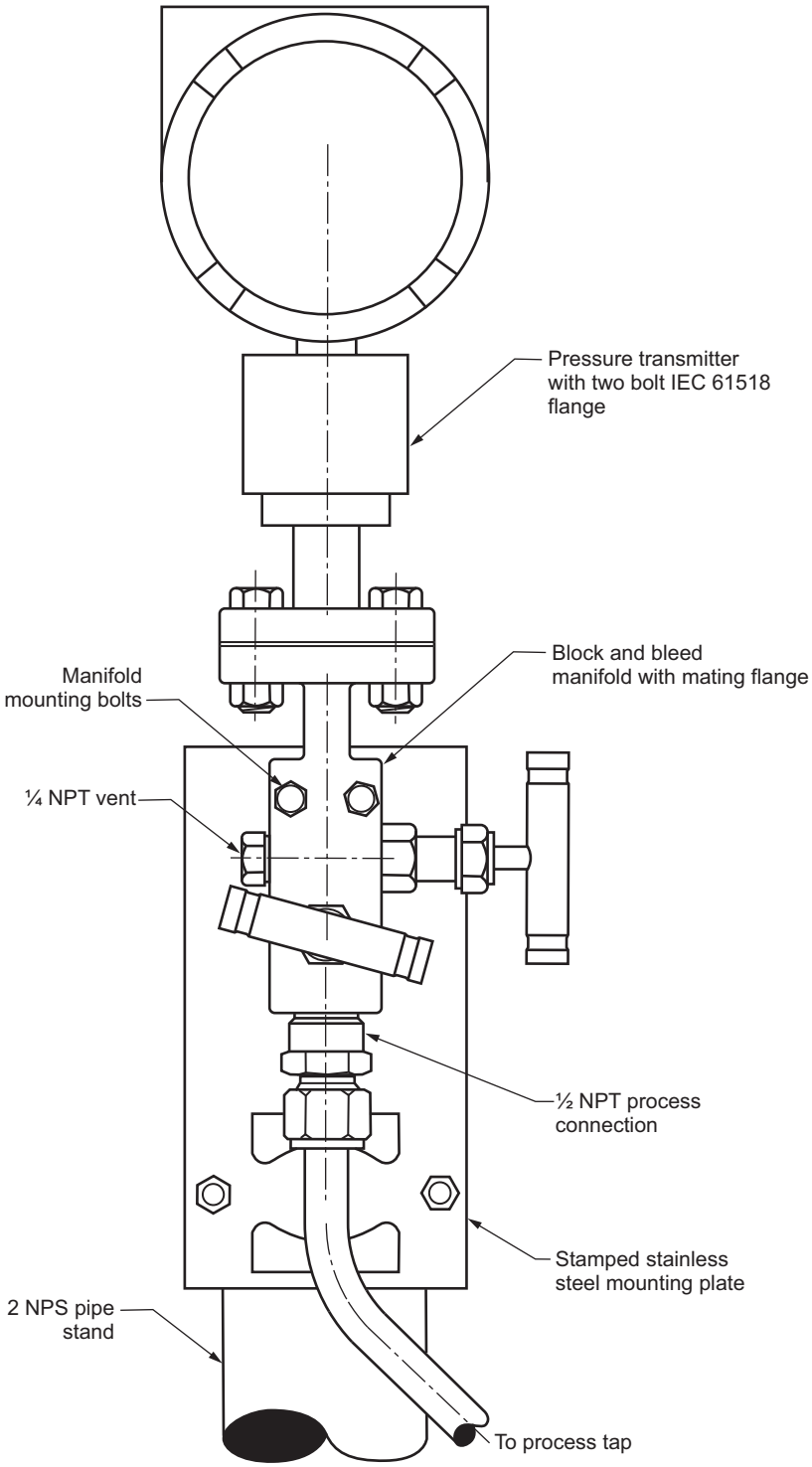

Figure 54—Two-bolt Pressure Transmitter

Provided by : www.spic.ir

--`,,`````,`,`,`

8.7.6 Multi Process Connection Manifolds

8.7.6.1 General

Meter manifolds are available in several body, bonnet and seal configurations with Female NPT, tube fittings, and instrument flange connections. Typical configurations include:

— separate mounting from the transmitter with threaded connections on both sides;

— direct transmitter mounting with two bolt flanges on one side and threaded on the other;

— direct transmitter mounting with two bolt flanges on both sides;

— direct transmitter mounting with bottom process connections for mounting inside an enclosure.

The additional ports are normally on the side of the manifold for access but they can be located on the bottom as well for use with enclosures.

8.7.6.2 Three Valve Manifolds

Three valve manifolds are the basic manifold for mounting differential transmitters. With this design, two valves are used to isolate the transmitter for maintenance and the third valve is used to check the transmitter zero by equalizing the two pressures. These are used for flow and different pressure measurement. The most common design uses female NPT connections on the process side and two bolt flanges on the other side for mounting the transmitter.

Venting and calibration is usually accomplished by using the bleed valves threaded into the rear or sides of the transmitter. However, $^1/_4$ in. NPT ports can be provide in the manifold body. These can be located on the process side of the block valves for purging or cleaning the impulse line or these ports can be provided on the other side by the transmitter for venting and calibration.

8.7.6.3 Five Valve Manifolds

The five valve blowdown manifold performs the same block and equalizing functions of a standard three valve manifold but has two more valves with a $^1/_2$ in. female NPT port are added for venting and calibrating the instrument. Typically these ports are on the bottom of the manifold to provide better draining.

Five valve manifolds come in two patterns. One pattern has two separate vent valves each with a vent port. The other has the two equalization valves in series and a vent valve between them. The latter configuration meets environmental standards for double blocking without plugging the vent.

8.7.6.4 Equalizing Valve

Equalizing valves are clamped between the transmitter and the two bolt flanges. They are used with tightly coupled transmitters and close coupled transmitters. The process block valves are used to isolate the transmitter for maintenance.

8.7.6.5 Liquid Level Manifolds

Normally, two valve manifolds that are flange mounted to the transmitter are used for liquid level differential pressure transmitters. Differential level transmitters typically do not depend on the nozzle for support but are bracket mounted with the manifold. See 7.3.2.2 for additional valves recommended for level transmitters.

When the fill fluid in the reference leg is the process liquid an equalization valve can be provided to allow checking the full scale output but if the valve is not correctly closed this third valve can cause the fill fluid to be lost into the vessel.

Provided by : www.spic.ir

Copyright American Petroleum Institute

8.7.7 Single Process Connection Manifolds

8.7.7.1 Block and Bleed Valves

Block and bleed valves simplify the connections associated with pressure gauges and tightly coupled pressure transmitters. A combined bock and bleed valve replaces multiple components so there are fewer leak points. This also reduces the space needed for the installation which also lowers the hazard.

8.7.7.2 Pressure Instrument Manifolds

Two valve manifolds are used with pressure transmitters. One valve acts as the block valve and the second valve is used for venting and calibrating. For tightly coupling to the process or stem mounting a $^{3}/_{4}$ in. male NPT connection can be provided. For manifold mounting a $^{1}/_{2}$ in. female NPT connection can be supplied. To connect the transmitter they can be furnished with either female or male threads. The latter eliminates the need for a pipe nipple. A flange connection can be provided for transmitters that have a two bolt flange.

8.7.7.3 Mono-flanges

Mono-flange manifolds (see Figure 55), can be mounted directly onto flange connections. A mono-flange provides isolation, venting, and instrument mounting in a single compact unit. The overall height of a gauge installation is less making the installation less vibration prone.

8.7.7.4 Gauge Valves

Gauge valves can be used as root valves to isolate instrumentation from the process. They are typically equipped with integral block and bleed valves. The valves are available with an extended length to ensure the valve handle extends beyond the pipe insulation. This also helps protect the bonnet packing during welding. Gauge valves have a variety of bonnet styles, including OS&Y (Outside Screw and Yoke). For refineries, the full port roddable type should be used so that the taps can be cleaned.

However, these valves are not part of the normal piping supply chain. They are not included in the industry standard PIP pipe specifications and there is limited availability in low chromium alloy steels. These issues tend to outweigh their advantages so they are not often used in major petrochemical projects. Figure 65 illustrates the different installation types.

8.7.8 Special Purpose Manifolds

8.7.8.1 Steam Trace Block

The steam trace block attached to the manifold is specified for processes that thicken or solidify at ambient temperatures as is common with many chemical and petroleum products. It is also used with transmitters and instruments to prevent weather conditions from affecting their operation.

8.7.8.2 Custom Manifolds

For special applications, custom manifolds can be made using needle valves as cartridge type valves. For instance two or more instruments could be connected off the same tap or valves could be grouped for stream switching. A metal block is drilled in the flow pattern needed. Holes are drilled into the block to accept the valve stem and its packing. The seat is part of the block or the block can be tapped to accept a threaded seat. See 9.4.4 for information on purge blocks.

Provided by : www.spic.ir

Copyright American Petroleum Institute

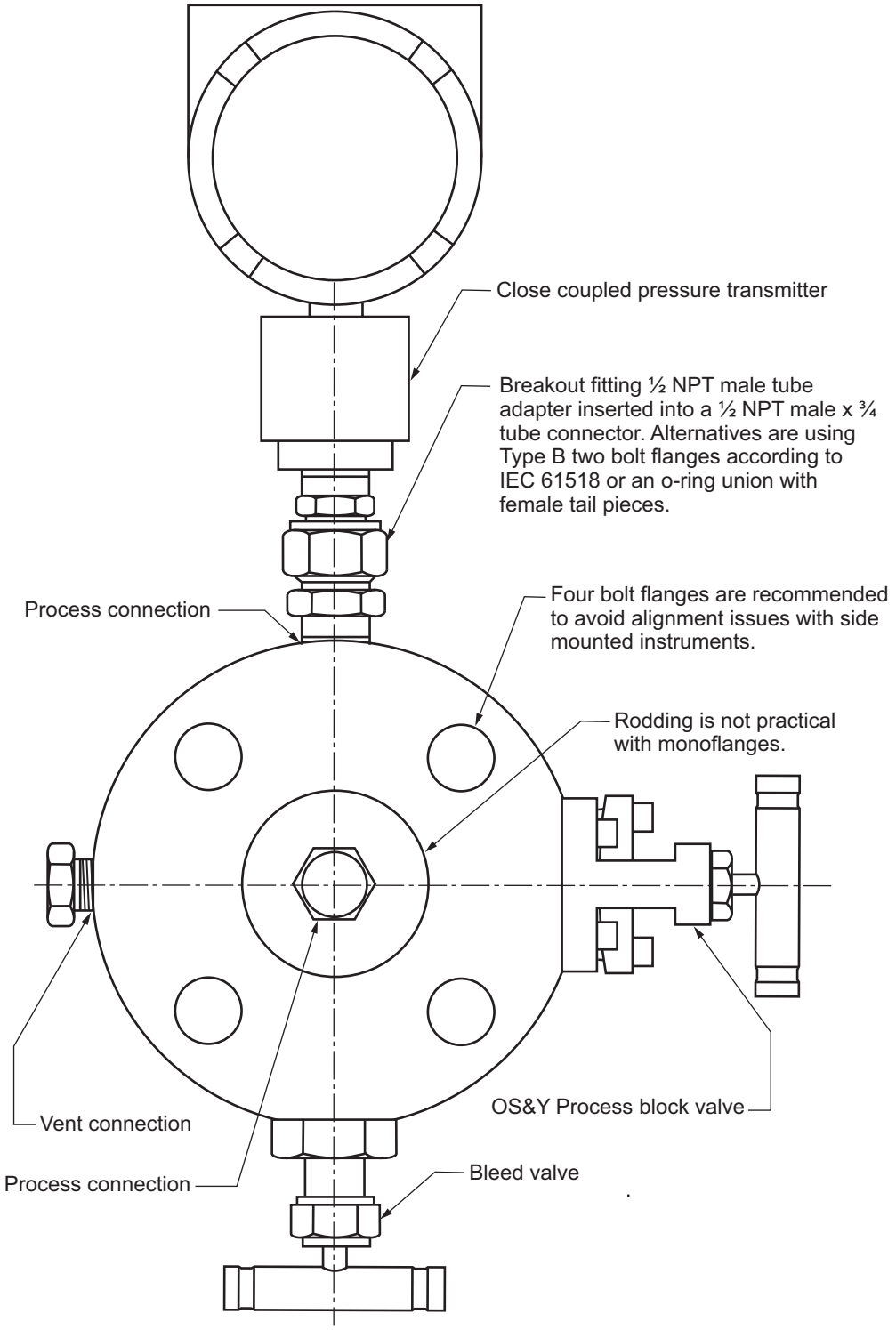

Figure 55—Tightly Coupled Transmitter Side-mounted to a Mono-flange

Provided by : www.spic.ir

Copyright American Petroleum Institute

8.8 Flushing Connections and Bleed Rings

A bleed, flushing, or calibration ring is a spacer that sits between a flange pair that has taps for flushing and calibration. See Figure 63 for an example installation of flushing rings. It is held in place by the compression from the flange bolts. They are also used for decontaminating pipe for maintenance.

The standard flushing connections are either 1/4 in. or 1/2 in. and they are provided either with threaded or socket weld connections. Flange connections and 3/4 in. connections are also available. For raised faced flanges, flushing rings have the same diameter from Class 150# to 2500# pressure ratings for a set pipe size and normally they are 33 mm (1 5/16 in.) thick with 1/2 in. NPS connections. Diameters are provided according to pipe size when ring join flanges are used.

Bleed rings with two connections are recommended for flushing viscous liquids or decontamination. Diaphragm seals with integral flanges usually have a vent connection option but bleed rings should be considered in liquid services to allow a complete flushing from the block valve to the instrument.

Since they do not have calibration taps, wafer style diaphragm seals should be provided with bleed rings. To facilitate installation with a wafer seal they can be procured as an integral unit with the transmitter. Figure 62 shows a wafer style seal with a flushing ring. If welded vent and bleed valves are desired, it is recommended that the rings be provided with the vessel trim.

Reducing flushing rings can also be used as adapters to enable the use of large, more sensitive diaphragm seals. Tapped holes are provided on both sides that match the drilling pattern of the respective connecting flange. Further, eccentric flushing rings can be provided for level measurements. Figure 56 shows a reducing eccentric flushing ring.

When installing bleed rings with other devices, the maximum recommended bolt length in tension (i.e. the zone between the nuts) is 150 mm (6 in.). Otherwise, incorrect tensioning could happen that result in leaks. Since they are longer, they expand more at higher temperatures, which could lower the compression on the flange gasket leading to leaks. Lastly, these bolts are not protected and might relax during a fire. See ASME PCC-1 for further information on tensioning.

8.9 Calibration Connections

The transmitter vent plug is frequently removed and used as a calibration port. Special tube fittings are available to assist with the calibration. They provide convenience access to the transmitter cell for calibration and prevent galling of transmitter NPT body threads.

The straight threads on the calibration tube fitting screw directly into bleed fittings. Depending on the bleed port, there are two fitting choices, a 5/16-24 in. thread or 1/4-28 in. thread. The other side of calibration fittings has a 1/4 in. tube fitting for connecting the calibration instrument.

Quick connection fittings specifically designed for calibration are also available. They can be threaded into the vent ports on a manifold. These fittings have no dead space, are vapor tight, and provide sealing to 34.5 MPa (5000 psig). Other fittings have been designed to quick connect to NPT threads or the male threads on a tube fitting.

8.10 Supports

Most offline instruments are designed to U-bolt mount to a horizontal or vertical section of 2 in. pipe. This enables them to attach to an instrument stand or mounting system. Mounting systems are made up of various components that can use the floor, wall or process pipe for their base.

Provided by : www.spic.ir

Copyright American Petroleum Institute

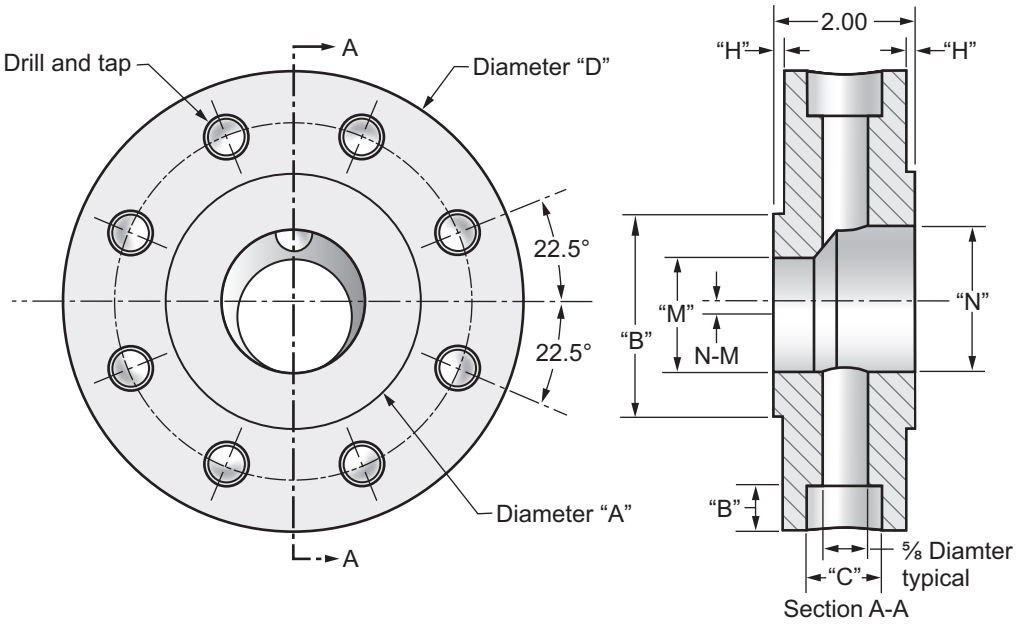

Figure 56—Reducing Flushing Ring

The instrument mounts are modular in design. For instance, a cross piece can be add to standard floor mount to enable the mounting of two or more instruments. Using a three piece line mount provides the ability to move the instrument in three dimensions.

Floor mounts typically use 2 in. NPS pipe welded to 250 mm × 250 mm × 6 mm (10 in. × 10 in. × 1/4 in.) galvanized steel base plate that is slotted to accept up to M12 (1/2 in.) mounting bolts from 150 mm to 200 mm (6 in. to 8 in.) centers. The top is plugged to prevent water entry. Two 90° gussets are welded to the base plate and the pipe extension, providing strength and stability to the floor stand. See Figure 69 for typical tbar standbase. Wall mounts are similar in design except they used two short pieces of pipe welded at 90° to each other.

Hot dip galvanizing should conform to ASTM A123-2012, Table 2 requirements. The minimum weight of zinc coating should be Grade 65 (530 g/m³) or better. Also galvanizing should be repaired by the methods described in ASTM A780.

See PIP PCFGN000 and PIP PCIGN100 for further information on instrument mounting and stand fabrication.

Modular U-bolt and cable mounts are used to line mounted instruments. Figure 57 shows the different components assembled into mounts for various pipe configurations. Instrument flag plates are used with surface mounted instruments such as filled system temperature turret style indicators or draft gauges (see Figure 59). U-bolts are used for the smaller line sizes and with the middle rung of hand rails.

Instrument supports that use the handrail for mounting should maintain a minimum finger clearance of 75 mm (3 in.) between the top rail and any obstruction. Further, the handrail gripping surface should be continuous, without interruption.

Cable mounts are used with lines 3 in. and larger. The cable mounts use a pair of high-tensile strength cable wrapped around the pipe to secure the instrument support. The length is determined by pipe diameter. The cables are secured to the saddle base plate with grooved seat wire rope clips. Compression washers are provided to keep the cable tight throughout the pipe operating temperature.

Provided by : www.spic.ir

Copyright American Petroleum Institute

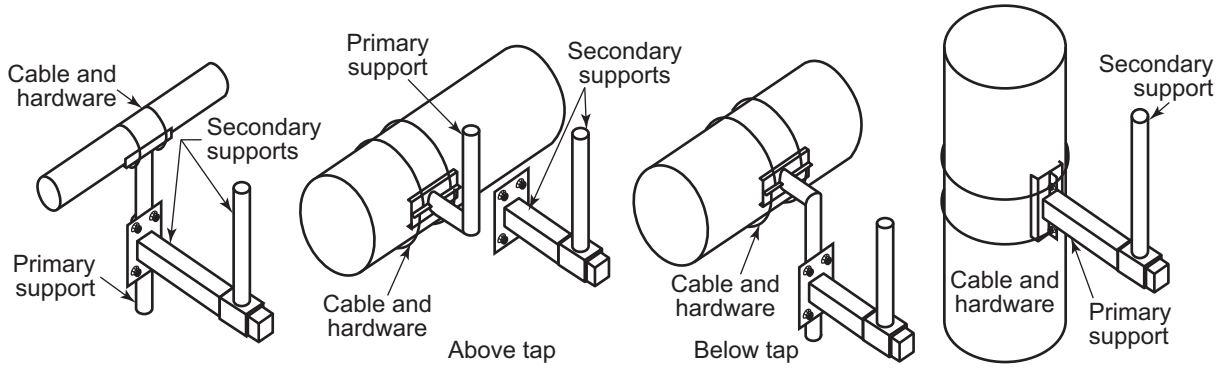

Figure 57—Instrument Line Mounts

Cables are either galvanized or austenitic stainless steel. To avoid liquid metal embrittlement stainless steel cables should be used with stainless steel pipe.

Due the occurrence of cable stretching welding brackets to the pipe can considered with hot lines or where liquid metal contamination from galvanized fittings is an issue.

8.11 Environment

Except for rain water, instruments should be mounted so liquids do not drain or drip on them. Also instrument installations should not contain pockets that can hold water. Ordinary water tends to become mildly acidic in refinery environments and long term contact can be detrimental to instruments.

The installation should comply with area classifications according to the electrical codes. Most process instruments are available with the necessary hazardous area classifications but some instrumentation could require an enclosure with an approved purging system. ISA RP12.4 and NFPA 496 describe these purging methods.

Enclosures in refineries are typically rated NEMA 4X or are a corrosion resistant IP 65 housing. An enclosure is considered corrosion resistant if it meets one of the following.

— Fabricated from AISI Type 304 or 316 Stainless Steel.

— Meets a 4C4 classification according to IEC 60721-3-4;1995.

— Passed NEMA 250-2008 Section 5.9.1 testing.

— Tested for four weeks according to IEC 60068-2-11;1981 with equivalent degradation to AISI 304SS.

Corrosion protection can be provided by using purged enclosures. Most types of corrosion require moisture. A dry instrument air purge or in critical applications, a nitrogen purge significantly reduces the moisture in an enclosure.

Space heaters only prevent condensing moisture so they are not as effective at preventing surface corrosion. Moreover, space heaters can create high temperature concerns with instruments, so they should be equipped with thermostats. Due to condensed disposal issues air conditioners are mostly restricted to walk in shelters. An alternative is to use a dehumidifier that breakdowns water such as electrolyte polymer membrane device.

Many process facilities are located near the sea so they can utilize seagoing vessels to obtain feed stocks and transport products. In these facilities it is recommended that equipment be protect from salt mist. As a minimum it is recommended that equipment in these facilities be rated according to ISA 71.04 for LC2 near shore type corrosive environment and a G3 rating for airborne contaminates.

Provided by : www.spic.ir

--`,,,`````,`,`,```,,`,`````,-`-`,,`,,`,`,,`---

Copyright American Petroleum Institute

Electronic transmitters should not be located close to high temperature lines and equipment. Locations where ambient temperatures exceed the supplier's specifications should be avoided. Transmitter mounting in these locations results in rapid deterioration and, when combined with high ambient temperatures, the instrument accuracy is affected.

Sun shields should be considered for installations that experience high ambient temperature combined with intense solar radiation. The solar gain on the interior of unprotected devices can be 11°C (20°F) or more, this can result in an interior temperature of 65 °C (140 °F) in the Persian Gulf Region and Northern Africa. A top shield can provide a 25 % reduction in solar gain and adding side shields up to a 46% reduction is possible.

On the other hand, in extreme cold [i.e. –40 °C (–40 °F)], enclosures and heating of the electronics could be necessary. See 10.6 concerning heated enclosures. Instruments in heavy snow or flooding areas should be a minimum of 1.2 m (4 ft) above ground.

The use of instruments in tropical environments is mostly related to how well they withstand humidity. Most are able to withstand a 100 % relative humidity across their operative limits. Normally, this is a standard feature. For less robust devices, options such as a conformal coating exist that improves their resistance to moisture and airborne contaminates.

8.12 Thermal Stress, Structural Loads and Vibration

Instruments should be installed and supported so that thermal stress, structural loads, and vibration do not affect them. Piping and tubing should be properly supported to prevent excess strain between the instrument and its associated equipment or pipe. The expansion of hot pipe or equipment should not place a stress on an instrument, nor should an instrument mounting cause a pipe failure.

The expansion of hot pipe or equipment should not place a stress on an instrument or result in pipe failure. Particular attention should be given to pipe and equipment with design temperatures ≥ 205 °C (400 °F).

Bellows meters, Bourdon tube instruments (e.g. pneumatic controllers), and force balance pneumatic transmitters are vulnerable to vibration damage. Also, liquid manometers, slack diaphragm draft gauges, and other magnetically coupled instruments cannot provide a usable reading.

When high amplitude shock or vibration is anticipated, or harmonic frequency is ≤60 Hz, instruments should have an independent support. To minimize vibration effects, these instruments should be mounted on a support that is not coupled to the vibration source. Additionally, dampening mounts or pads can be provided to manage vibration.

Conversely, current process transmitters have no significant flexure elements so they are vibration resistant. Less than ±0.1 % of URL is a typical response to vibration when tested according to the requirements of IEC 60770-1 with a vibration level of 10 to 60 Hz, 0.21 mm displacement peak amplitude and 60 to 2000 Hz at 3g.

A capillary diaphragm seal is the preferred method for un-coupling an instrument from sources of stress and vibration. Also coiled tubing or a flexible hose that act as expansion loops can be provided.

Braided hose can be used when more movement is needed. However, hoses should not be twisted. To obtain movement on three axes, both hose connections should be facing up so the hose forms a simple U and one connection should have a live swivel joint. Otherwise, oblique hose movements relative to the installation plane results in twisting.

Lastly, flexible conduit or armored cable should be provided for the instrument subject to movement. Inline instruments in particular should be provided with liquid-tight flexible metallic conduit (LFMC) or a similar material.

Provided by : www.spic.ir

Copyright American Petroleum Institute

8.13 Process Pulsation

Instruments that measure the pulsating pressures of reciprocating pumps and compressors should be equipped with pulsation dampeners to prevent premature failure. Needle valves, floating pins, or porous metal devices are often used for this purpose.

However, snubbers reduce the noise by lowering the dynamic response time of the system. Therefore, they should be used cautiously where response time is important.

In the case of flow instruments, pulsation leads to significant inaccuracy and systematically high differential flow measurements. To obtain the correct reading, filtering should be applied to resulting flow reading not the differential pressure. The ISO TR 3313-1998 provides further information on this topic. Also see Section 5.4.4.4 on frequency effects on process piping.

8.14 Differential Pressure Flow Meters

The installation of differential pressure flow devices is generally the same regardless of the type of primary element. See Figure 58 for typical closed coupled flow meter installation details. PIP PCIFL100 shows the preferred tap locations of orifice plates and other head meters, such as flow tubes. The connecting pipe and manifold is a source of inaccuracy. To meet the recommendations of ASME MFC-8M and ISO 2186 about avoiding long impulse lines. Flow measurements should be transmitted electronically or pneumatically.

Differences in impulse line elevations create head problems. It is necessary to eliminate errors caused by vapor condensation in the impulse lines. Equal liquid head should be provided on each side of a differential transmitter.

Differences in specific gravity between impulse lines can be caused by temperature or the amount of gas or water. For example, if the meter is 2.5 m (100 in.) below the orifice, with one side filled with water and the other side filled with a liquid that has a specific gravity of 0.65, the zero error is 35 % of full scale for a 25.4 kPa (100 in. $WC_{20°C}$) range.

Sensing lines for differential pressure transmitters should run together to keep both lines at the same temperature. If insulation or heat tracing is needed, both lines should be insulated as one line.

Mounting the meter or transmitter tightly coupled to the meter taps greatly reduces head error from differences in specific gravity and vapor binding as well as the square root error.

8.15 Process Differential Pressure Measurement

Process differential pressure measurements across filter, columns, etc. are remote connections and require the same considerations. In gas services they should be mounted above the taps so they are self-draining. See 8.3.5 concerning differential measurement in condensing service. In liquid service the connections should be made at the same elevation. When they are not at the same elevation, a calculation should be provided to correctly calibrate the instrument. They need to be calibrated like a level transmitter; that is an elevated or suppressed zero calibration is needed. Further once they are installed they should be zeroed with actual process fluid so wet leg calibration facilities; i.e. filling tee, etc. are necessary.

8.16 Draft Measurement

8.16.1 General

Draft is the negative pressure inside a furnace and is the only motive force moving air through a natural draft furnace. The most critical point for measuring draft pressure is the arch or roof of a furnace. This is the minimum draft point; i.e. least negative and is the pressure control point for most furnaces. [23]

[23] See API 556 for further discussion about the use of draft and API 560 for the recommended instrument tap locations and sizes.

Provided by : www.spic.ir

--`,,```,,,,````-`-`,,`,,`,`,,`---

Copyright American Petroleum Institute

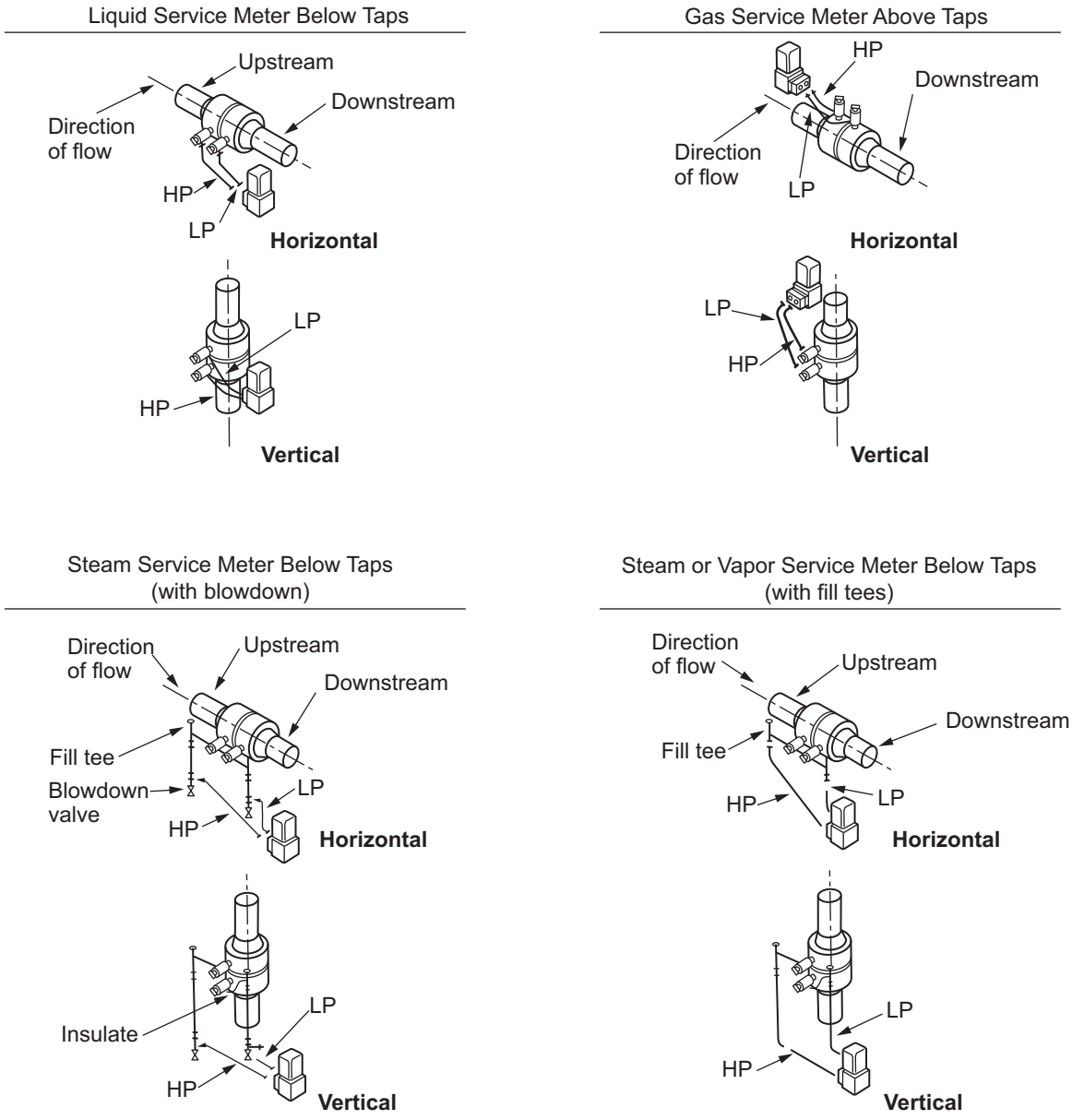

NOTE 1 Gauge valves shown, but piping specification gate valves can be provided as well, particularly if rod-out tees are desired.

NOTE 2 Impulse lines should be minimum length and should be symmetrical.

NOTE 3 Slop line at least 1:12 to avoid pocking and to ensure venting or draining.

NOTE 4 Connect high pressure instrument tap to the up steam side of the pipe.

NOTE 5 Flow up is preferred for liquid services.

NOTE 6 Install instrument below the taps for liquids, steam, or condensable vapors.

NOTE 7 Install the meter above the taps for non-condensing gas.

NOTE 8 For steam service both filling-tees are even with the upper tap.

Figure 58—Close-coupled Flow Metering Installation Details

Provided by : www.spic.ir

Copyright American Petroleum Institute

The connections to draft gauges should be designed for corrosive conditions. Furnace combustion products include acidic compounds. The impulse lines should use stainless steel tubing and they should have no pockets and be self-purging. See Figure 59 for a typical piping arrangement. To self-purge, a vertical rise of bare tubing should be provided to cool the gases and drain the condensables back into the furnace.

Also, a slow flowing purge is sometimes used or the drain valve is left open to induct some air between measurements. The major disadvantage of these techniques is that they affect oxygen and combustibles measurements as well as lower furnace efficiencies and are not recommended.

Wind around the furnace also upsets the measurements. If the draft reference point is located at the up-wind side of the furnace, the wind impact causes an increased atmospheric pressure reading. The deviation could be 50 Pa (0.20 in. $WC_{20°C}$), which is twice the usual desired draft control point.

If the draft reference point is located at the furnace down-wind side, the wind causes the pressure at the down-wind side to be less than true atmospheric pressure. The draft measurement can vary as much as 76 Pa (0.30 in. $WC_{20°C}$) on the down-wind side. The error due to wind can be as much as 300 Pa (1.2 in. $WC_{20°C}$) according to the World Meteorology Organization.

Stable draft measurements can be made by using a Piezometric pressure fitting or barometric pressure port connected to the atmospheric side of the draft instrument. Still wind blowing across the furnace stack can cause variations in draft but these are true variations in the furnace operation. As a result some filtering of the measurement signal might be necessary.

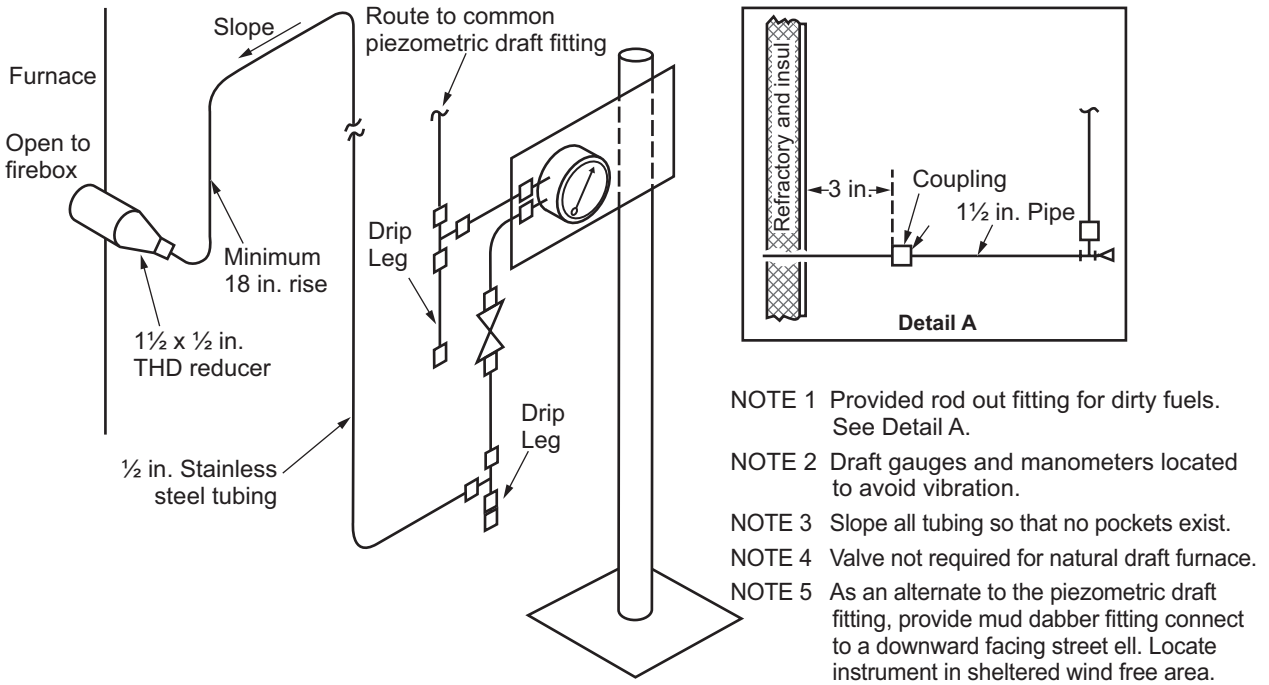

NOTE 1 Provided rod out fitting for dirty fuels. See Detail A.

NOTE 2 Draft gauges and manometers located to avoid vibration.

NOTE 3 Slope all tubing so that no pockets exist.

NOTE 4 Valve not required for natural draft furnace.

NOTE 5 As an alternate to the piezometric draft fitting, provide mud dabber fitting connect to a downward facing street ell. Locate instrument in sheltered wind free area.

Figure 59—Piezometric Wind Stabilization Fitting Fabrication

8.16.2 Fabricated Draft Fitting

A fabricated Piezometric draft fitting is shown in Figure 60. The probe should be fabricated from a 1 in. stainless steel pipe. The exact port drilling is important as well as polishing the internal and external areas around the ports. See ASME PTC 19.2 for the acceptable method of fabricating pressure taps. See 6.2 concerning tap fabrication and burr removal.

Provided by : www.spic.ir

Copyright American Petroleum Institute

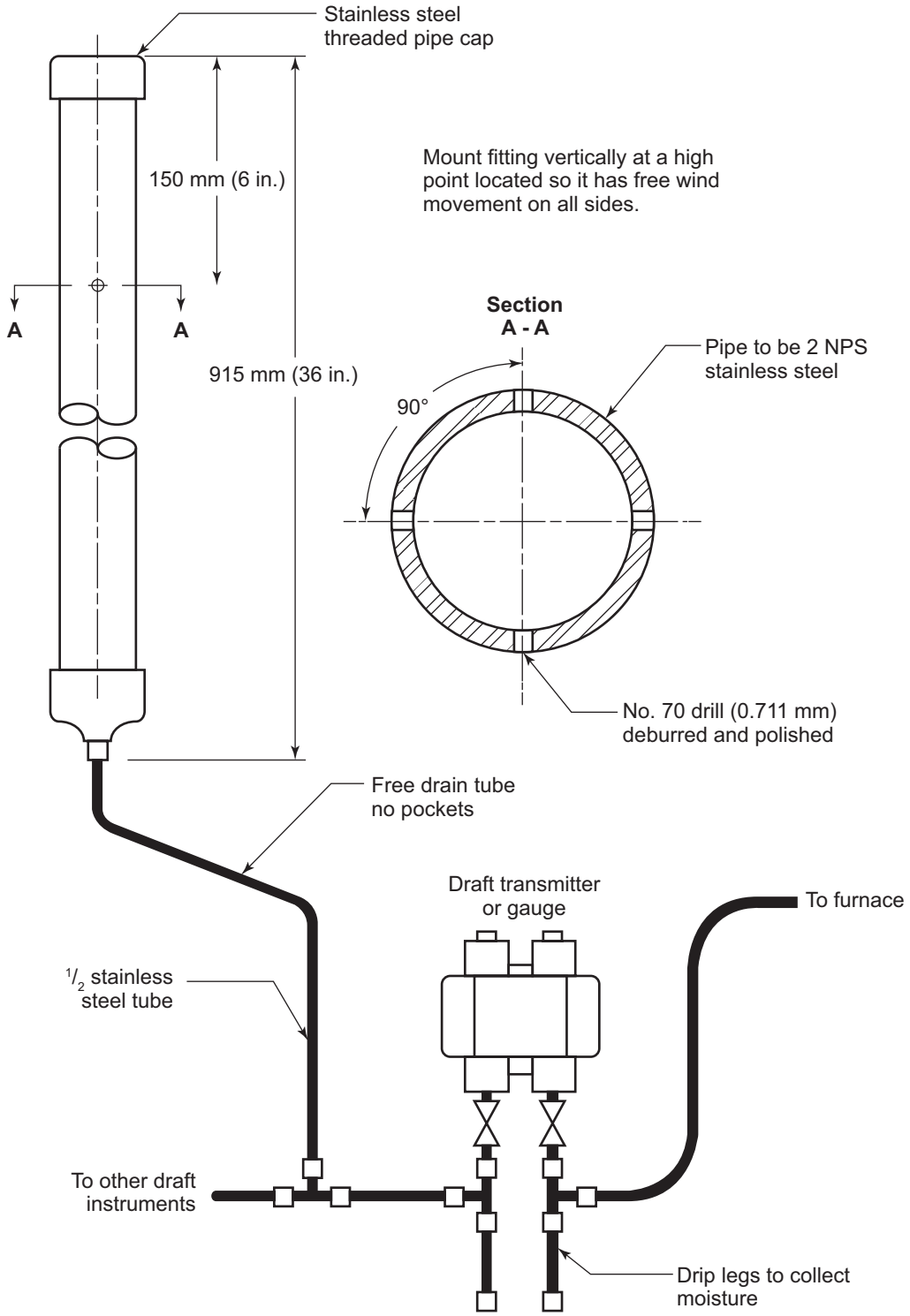

Figure 60—Piezometric Wind Stabilization Fitting Fabrication

Provided by : www.spic.ir

Copyright American Petroleum Institute

8.16.3 Circular Piezometric Draft Fitting

Piezometric draft fittings and barometric pressure ports are also available commercially. See Figure 61. The circular shape of the commercial Piezometric draft fittings provides a 360° radial entrance for the wind flow. The perforations located on the entering air edges of the plates diffuse the airflow to minimize the effect of non-horizontal flow. This permits flows with approach angles of up to 60° from the horizontal plane without affecting measurement accuracy.

The perforations located near the center of the bottom plate opposite the signal connection serve to relieve the Venturi effect that develop with higher wind rates through parallel plates. This allows non-pulsating measurement in wind gusts.

The perforations permit the probe to sense the atmospheric air pressure to within 1 % of the actual value when being subjected to varying horizontal radial wind flows with velocities up to 18 m/s (40 miles/hr). It can correct wind flows to within 2 % and 3 % with approach angles up to 30° and 60° respectively from the horizontal.

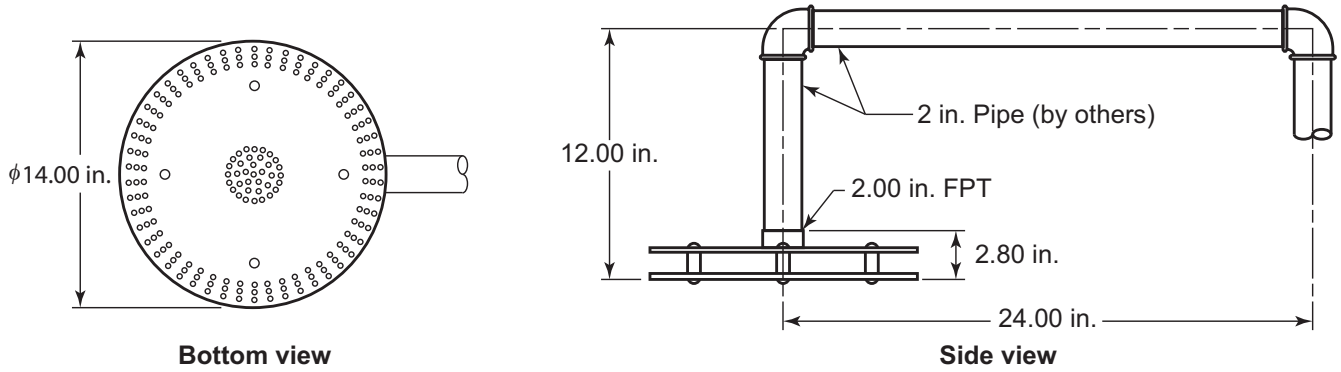

Figure 61—A Commercial Piezometric Wind Stabilization Fitting

8.16.4 Piezometric Draft Fitting Location

To optimize the performance of the Piezometric draft fitting, it should be located away from structures and obstacles large enough to create a wind induced pressure envelope. It should be in an area where the wind can flow freely over it from any direction. For better precision, a common reference header can be provided for all the users on a furnace. The header should freely drain to a low point drain pot.

For services such as clean rooms and bio-isolation facilities, mounting the fitting on a 5 m to 6 m (15 ft to 20 ft) high mast above any obstructions is typical. This gives it an elevation that is outside any wind produced pressure envelopes.

8.16.5 Thermal Effects on Draft Measurement

Temperature shifts and gradients can affect draft measurements since are made at low pressures. Rain can unevenly cool a transmitter body. For draft range measurements placing a transmitter and its manifold in an enclosure can reduce the signal noise. For example, an exposed transmitter with a normal indication of –25.4 Pa (–0.1 in. $WC_{20°C}$), when suddenly cooled by rain the reading can increase up to 203 Pa (+0.8 in. $WC_{20°C}$). So, for low range and draft measurements it is recommended to enclose the entire transmitter. Still, 90 % of temperature effects can occur at the sensor connections.

Provided by : www.spic.ir

Copyright American Petroleum Institute

8.17 Cryogenic Installations

In general, cryogenic liquids have little or no sub-cooling so almost any heat input leads to vaporization. To prevent vaporization the process should be kept cool and protected from heat leaks. These are caused by heat working its way into the process along paths of thermal conductivity such as temperature sensors or impulse lines.

Pressure transducers used in the cryogenic environment are the same as those used at ambient conditions. They are protected by an insulating gas pocket or a fill liquid that is at ambient temperatures.

Self-purging tubing is the preferred method for cryogenic installations, but it can have problems with frequency response and oscillations. Using a 60/40 ethylene-glycol and water blend as liquid seal is effective to –51°C (–60°F).

Below these temperatures the tubing should be installed so there is approximately 200 mm (8 in.) of un-insulated tubing to provide a self-purging dead end. This provides a gas pocket within the instrument that is warmed to the ambient temperature. The instruments should be mounted 30 cm (12 in.) above the highest tap so the condensables can be drained. A minimum slope of 50 % is recommended for horizontal runs.

To minimize heat leaks, the primary block valve and the section of impulse line after it should be insulated for a minimum of 100 cm (40 in.). The primary block should be provided with an extended bonnet to enable operation from outside the insulation.

For level transmitters, the liquid vapor pressure at the lowest ambient temperature should be at least 69 kPa (10 psi) higher than the operating pressure of the vessel. If this cannot be met, to prevent liquid backing up into the impulse line, the impulse line from the lower nozzle should be heat traced and insulated.

A vapor leak results in a loss of the insulating gas pad or fill fluid exposing the transmitter to cryogenic temperatures. The entire installation including instruments should be suitable for cryogenic conditions by using materials such as stainless steel. Also, for line mounted instruments, stainless steel supporting brackets should be provided.

8.18 Oxygen Installations

8.18.1 General

Oxygen is a significant fire hazard. Ignition is much easier with oxygen and the subsequent combustion is more intense. High concentrations of oxygen cause metals to burn. Fires in an oxygen enriched atmosphere can be extremely destructive.

Besides the normal ignition sources such as high temperatures, etc., combustion can be started by reactions with organic compounds, particle impact, static discharge, and adiabatic heating from compression.

8.18.2 Reaction with Organic Compounds

Organic contaminants and fine particles combust violently in concentrated oxygen and are often the beginning of the kindling chain that ignites the materials that are burn resistant. Hydrocarbon oil or grease contamination is particularly undesirable.

8.18.3 Particle Impact

Particle collisions are an ignition source. The combustion starts with the conversion of the particle's kinetic energy into heat. Particle impact caused by an oxygen stream is considered to be the prevalent mechanism that directly ignites metals.

Provided by : www.spic.ir

Copyright American Petroleum Institute

Particle entraining velocities are created by pressure reduction through inline devices. High velocities occur downstream of pressure regulators, control valves and flow limiting orifices. Depending on the piping configuration a velocity profile, such as swirl, can be generated that lasts for an extended distance.

8.18.4 Static Discharge

A static discharge from a non-conducting surface can provide enough energy to ignite material that receives the discharge. A static electric discharge can occur in poorly cleaned or inadequately grounded piping. Also, electrically isolated valve trim can develop a charge by rotating against a nonmetallic seat. Ball valves are particularly prone to this problem. Static electrical charges can also be generated by fluid flow, especially when particulates are present.

8.18.5 Heat of Compression

Heat is generated when gas is compressed. If this compression occurs quickly, adiabatic conditions are approached and an increased temperature results.

When high pressure oxygen is released into a dead-end system, it adiabatically compresses the existing low pressure oxygen. The resulting temperature increase can ignite contaminants or piping components. This hazard increases with system pressure as well as with pressurization rates. Adiabatic compression is considered to be the most common ignition source for nonmetals.

8.18.6 Materials

Ignition and burn resistant materials should be used. The use of carbon steel should be avoided for instruments and their impulse piping. Copper and copper base alloys as well as nickel and nickel base alloys; such as UNS N04400, are the most resistant to oxygen combustion.

Combustion studies of thin cross sections of N02200, N04400, N10276, copper, and stainless steels showed that N02200 was the most combustion resistant while 316 and 316L Stainless Steel was the least. The other materials had adequate performance.

It has been found that small, thin wall stainless steel tubing propagates combustion at atmospheric pressures. Still, stainless steel is often used without thickness limitations since instrument lines are small bore tube or pipes in a non-flowing applications.The use of stainless steel tubing is accepted by most standards.

Metal should be used in preference to polymers. Generally, metals are more difficult to ignite. Equipment should be selected that minimize the use of polymers and those that are provided should be shielded with metal or ceramics.

Use fluorinated/halogenated polymers (e.g. PTFE, PFPE, CTFE, FPM, and FKM) as opposed to polymers containing carbon-hydrogen bonds (e.g. EPDM, PVC, SBR, and fluorosilicones). Instrument fill fluids should be fluorinated or halogenated polymers that are carbon and hydrogen free. PFPE provides adequate performance as a lubricant.

Since they are exceptionally burn resist, fully oxidized ceramics should be considered for valve seats, restriction orifices, and impingement sites.

ASTM G63 and ASTM G94 provide further information for selecting nonmetals and metals, respectively, for oxygen service. Also, IGC 13/12/E provides detailed design and operation guidance.

8.18.7 Design Recommendations

Use proven hardware from similar operating conditions that have a trouble free history in oxygen service. The geometry of a component can have a major effect on the flammability of metals. Since they have less thermal mass, thin components or high surface-to-volume components tend to be more flammable.

Provided by : www.spic.ir

Copyright American Petroleum Institute

Temperature increases should be avoided from friction or galling by rubbing components. Components that commonly rub include valve trim, packing glands, etc. Also, flaking from rubbing surfaces can create impinging particles.

System startups or shutdowns can create velocities that are much higher than those experienced during steady state operation. The piping and valve arrangement should anticipate these transitions.

Keep gas velocities low to limit particle kinetic energy. Choke points, nozzles, or converging/diverging geometries that produce Venturi effects and high velocities should be avoided.

Restriction orifices with high pressure differentials produce closed to choked flow conditions. In their place, install laminar flow restrictors (e.g. capillaries) to limit depressurization flow rates. Otherwise, to reduce the risk of particle impact ignition, burn resistant materials such as ceramics should be used for restriction orifices and the components immediately downstream.

The system should be designed so that particles are not introduced and those that do exist are gently moved through the system or filtered rather than allowed to come to rest in a pocket. To accumulate fewer particles, use vertical piping. Avoid low points and dead-ends particularly in liquid oxygen systems where low boiling point hydrocarbon liquids are likely to condense. Those low point and dead ends that do exist should be designed to exclude contaminants. Providing polished surfaces and rounded internal joins help prevent the accumulation of contaminates and makes cleaning easier.

Orient high flow rate valves (such as ball, plug, butterfly, and gate valves) so that particles do not accumulate at their opening point. In horizontal piping the valve stems should be oriented vertically.

Use filters downstream of where particles tend to occur and at high risk locations; such as upstream of throttling valves. Use excess flow devices to limit particle acceleration and to reduce the volume of oxygen released during a fire.

Static meters, such as orifice plates, are preferred over moving element meters for oxygen service. Filtration is generally installed upstream of moving element meters.

It should be understood that flow measurement orifice plates have small pressure drops with marginal velocity increases. They are considered to be more of an impingement site rather than a hazard source because of the higher velocity and sharp edges at the reduced areas. Material such as N04400 might be considered.

8.18.8 Valves

Valve selection should receive special attention. Because valves are exposed to severe conditions and can put the operator at risk during their use, higher pressure ratings and more fire resistant trim is recommended for them than other components. Particular attention should be given to valve pressure and temperature ratings, internal materials of construction, and how readily the valve can be cleaned and kept that way.

As valves are opened and closed, they generate localized high velocities at their seats. Special consideration should be given to the selection of seat materials and adjacent impingement areas.

ASTM G88 and NFPA 51 emphasize that valves under pressure need to be opened slowly. If an upstream valve is opened rapidly, adiabatic heating occurs with the polymer seat of a closed downstream valve. Long pressurization times are necessary. Avoid pressurization times of less than a second.

Valve opening speed can be controlled using multi-turn valves. Multi-turn needle valves with metal seats are recommended since they open slowly with an equal percentage type flow curve. Valves with a quick opening flow characteristic should be avoided. The valve trim should not become electrically isolated. A grounding spring or tab that maintains contact between the trim and the body should be used.

Provided by : www.spic.ir

Copyright American Petroleum Institute

Care should be taken in selecting control valves. Quarter turn valves that operate quickly should be avoided. Ball valves are often used as fast closing shutoff valves, but these valves have been opened improperly, causing fires.

Globe valves have a tortuous path with several impingement sites. The valve trim varies, but it can have relatively thin section fitted with elastomer/polymer inserts to minimize leakage and seat damage.

Sometimes cage trims are used, which are usually of thin section and provide sites for debris to be trapped or guillotined.

8.18.9 Cleaning

Cleaning should receive central consideration in the design. A system should be designed so that it is easy to clean and stays clean.

The flammability of the contaminants, lubricants, polymers, and metals, together with the oxygen concentration and pressure levels, determine how thorough a cleaning is needed. For a low pressure system, the particle impact hazard is not as severe, and so it is possible to have different cleaning requirements from those needed for a high pressure system. ASTM G93 and IGC 33/06/E contains additional information on cleaning methods and cleaning levels.

Systems should be disassembled for cleaning. It should be possible to disassemble a system into sections that can be thoroughly cleaned. Just flushing a system can deposit and concentrate contaminants in stagnant areas.

Individual items need to be cleaned separately, preferably prior to their assembly, so contaminants or solvents trapped in crevices or other areas are not left. Stainless steel tubing can be purchased chemically cleaned and passivated to comply with ASTM G93 Level A and CGA 4.1 standards. Products such as valves, regulators, and instruments should be cleaned and sealed in protective packaging by the supplier. The user should review the supplier's cleaning procedure and packaging for suitability.

For maintenance, the user should follow the supplier's instructions for disassembly, inspection, reassembly, and testing. If the device cannot be completely dissembled the supplier should provide a cleaning method that removes contaminants, particularly lubricants.

After assembly, the system should be purged with nitrogen or clean, dry, oil free air to remove the last contaminants from the system.

9 Instrument Protection

9.1 Introduction

This section describes the recommended techniques for sealing and purging instruments to protect against adverse process conditions.

A *Seal* is either a mechanical barrier or liquid seal located between the process and the instrument.

A *Liquid Seal* is a static fluid that is intentionally placed between the process and the instrument.

A *Purge* is a continuous flow of either gas or liquid into the process to prevent instrument contact with the process fluid.

A *Flush* is the intermittent use of a liquid or steam to clean or decontaminate a line or instrument.

Provided by : www.spic.ir

Copyright American Petroleum Institute

9.2 Diaphragm Seals

Diaphragm seals can be used when the instrument should be isolated from the process. They are best suited for pressure and level measurements. They are often used in the following applications:

— slurry or polymerizing services;

— toxic fluids;

— fluids at extreme pressures;

— corrosive fluids;

— to avoid using special alloys;

— to provide installation flexibility;

— elevated or cryogenic temperatures;

— to avoid impulse line heat tracing;

— to eliminate wet and dry legs;

— level transmitter mounting above the lower nozzle.

Capillaries can simplify installation. Capillaries are easier to route than a pipe or tube. Where platform space on towers is limited, diaphragm seals enable locating the level transmitter in a convenient location and avoid space consuming impulse piping.

It has limited applicability for situations that require small spans. Due to their lower accuracy, diaphragm seals have a reduced applicability for flow and interface measurements. In flow service, they are used with slurries when purges are not acceptable. Wedge meters or eccentric flow tubes are used and the diaphragms seals are flush mounted on a saddle flange or a studding outlet. See 6.2.6 for further information on the application of wedge meters. Smaller flow elements use flow through seals or inline chemical tees.

See ASME B40.2 for further information on diaphragm seals.

9.2.1 Construction

A standard diaphragm seal has fill fluid enclosed in a chamber between a diaphragm and the measuring element. Frequently, to remotely locate the instrument, a capillary is used between the chamber that is in contact with the process and the measuring device to transmit the pressure reading. Since the seal diaphragm only displaces a small volume itself, transmitters and indicators that have microscopic displacements should be used.

The interior of the diaphragm seal is completely filled with liquid. Diaphragm seals are filled under a deep vacuum and then carefully sealed. Even a small amount of remaining vapor causes significant thermal errors.

Diaphragm seal type and the fill fluid should be selected based on the process fluid data. The chamber, diaphragm, and gasket materials should be compatible with the process fluid. The diaphragm seal assembly should have a fully welded construction. For transmitters threads should not be used as a sealing surface for the fill. It's critical that air does not leak into the assembly by mishandling.

Provided by : www.spic.ir

Copyright American Petroleum Institute

Seals for transmitters are available in a variety of configurations: threaded, inline, flanged, etc. The seal itself might come with an integral process connection or with a separable flange. In addition, it's common to provide a separate bleed ring that is clamped between the seal and the process flange, for calibration and flushing.

A common style is a diaphragm mounted on a wafer or pancake. Figure 62 shows a typical wafer style diaphragm seal with a flushing ring. The wafer is clamped between flanges and connected to the transmitter with an armored capillary. The wafer seal has a small footprint and provides flexibility for using various flanges ratings. The same wafer seal is suitable for flange ratings up to Class 2500#. On the other hand, diaphragm seals with bolted flanges are frequently used above Class 600 ANSI or where a RF face is not acceptable.

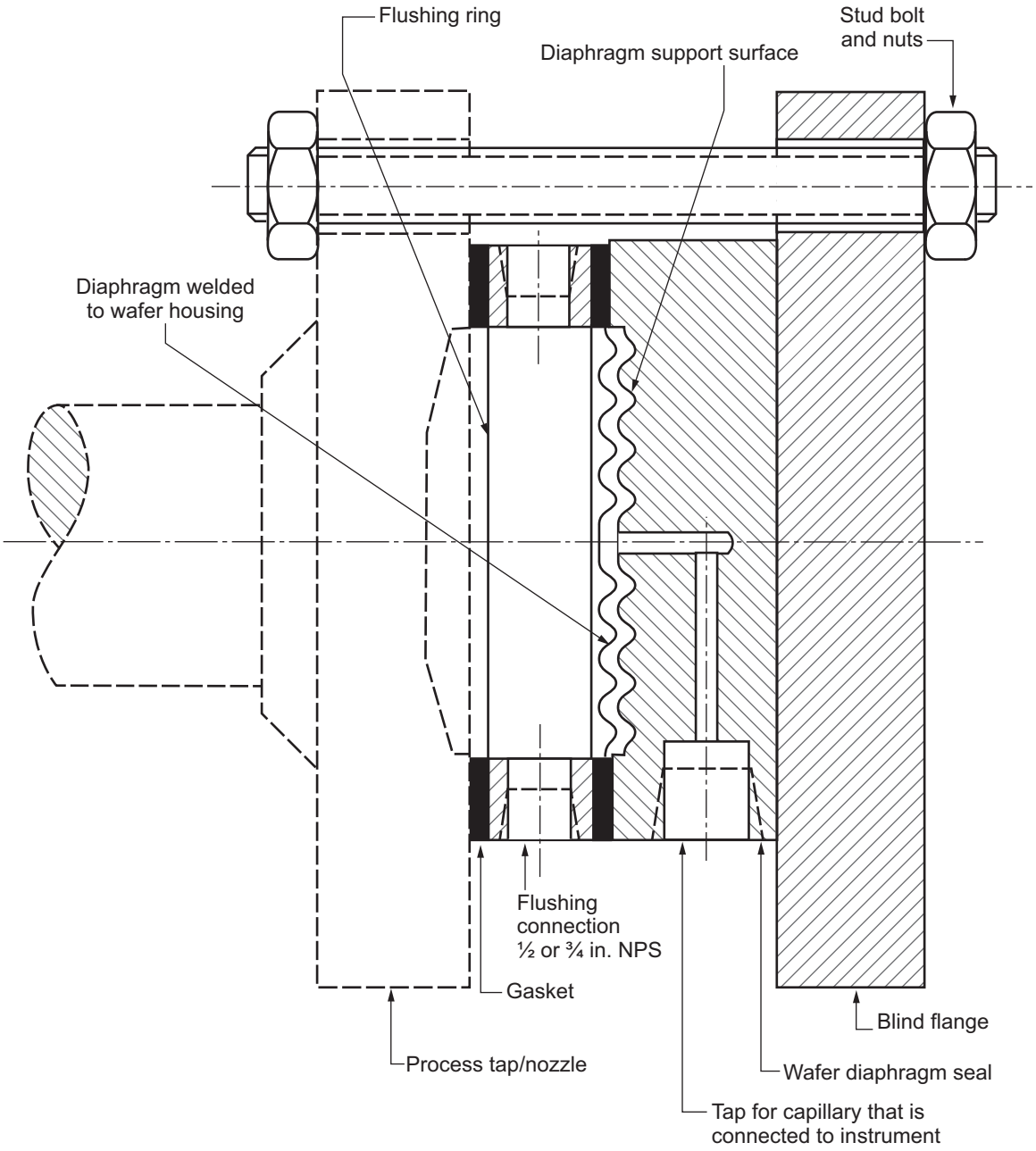

Figure 62—Wafer-style Diaphragm Seal

Provided by : www.spic.ir

Copyright American Petroleum Institute

9.2.2 Diaphragms

Large diaphragms are more sensitive resulting in better accuracy. They contribute less to the overall system spring rate and are less sensitive to ambient and process temperature changes. They are capable of larger volumetric displacements. This allows the use of higher volumetric displacement instruments. This also allows them to accommodate the fill fluid thermal expansion in the capillaries as well as instrument.

The optimum diaphragm size is 3 in. This size is a compromise between seal volume which slows the response and increases the thermal sensitivity versus a low spring rate that increases the measurement sensitivity.

Diaphragms are available in a wider variety of materials than found from most transmitter manufactures. Coatings are also applied to diaphragms to reduce material sticking and corrosion. Table 19 shows the various materials available for diaphragms.

Table 19—Diaphragm Seal Materials

304L SS	N04400
316L SS	Silver
321 SS	Tantalum
N08020	Fluoropolymer Coated Metal
Gold Coated Metal	R50700
N06022	R60702
N10665	NBR
N10276	FFKM
N06600	PCTFE
N02200	Fluoropolymer
N02201	FKM

9.2.3 Capillaries

Diaphragm seal assembly capillaries should be stainless steel and have PVC jacketed stainless steel armor and a support tube welded to the diaphragm holder.

Generally, differential transmitters with dual diaphragm seals have equal length or balanced capillaries. In dual capillaries, care should be taken to ensure that the fill fluid static head pressure is less than the force needed to move the measuring element.

It is also important to maintain the capillaries at the same temperature. Diaphragm seals are significantly affected by the ambient temperature. Differential transmitters using two equal length capillaries can help offset the thermal expansion error, but both capillaries should be kept at the same temperature. Unequal exposure to sunlight has resulted in measurement errors.

Even when dual capillaries are used, differences in the fill fluid density caused by ambient conditions can create an unacceptable error. In particular, interface and density measurements, which often require a large distance between the measurement taps and have a small span, might not be accurately measured. There are systematic seasonal errors caused by ambient temperature shifts. At continent interiors, annual temperature variations of 50 °C (90 °F) are common in the Northern Hemisphere along the 40th parallel.

Also, to reduce these effects, the seal system volume should be minimized. It is often preferable to use direct mounted diaphragm seals for pressure transmitters and gauges for this reason.

Provided by : www.spic.ir

--`,,,````,`,`,```,,`,`````,-`-`,,`,,`,`,,`---

Copyright American Petroleum Institute

Another technique for reducing thermal expansion effects reduces seal diaphragm stiffness so when the fluid heats up, it tends to expand preferentially into the seal chamber and not towards the transmitter measurement diaphragm. Since they are more flexible, larger diaphragms are recommended for differential measurements and low range pressure measurements.

For interface level measurement, the temperature effects can also be overcome by using two regulated electrical tracers on the capillaries so the temperature is the same on both sides. Each side should be independently regulated to a temperature that is slightly higher than the normal summer temperature. In most cases 50 °C (120 °F) is adequate.

To maintain an acceptable response and minimize temperature gradients, the capillary lengths should be as short as possible since they contain the largest fluid volume. However, in some level applications, capillaries as long as 10 m (35 ft) might be needed. Mounting the transmitter above the lower tap could shorten the length as well as overcome mounting problems. However, the diaphragm seal will see negative pressures when the liquid level drops below the transmitter.

However, in level applications, another approach is using capillaries of unequal length and different diaphragm spring rates to achieve a higher overall accuracy by using offsetting systematic errors. The high pressure side (i.e. the lower tap) capillary is shorter and the diaphragm stiffness is increased. The result is that density error offsets some of the thermal error resulting in a lower overall error.

A symmetrical configuration was thought to cancel out this error because the expansion and contraction was the same on both sides of the transmitter. While the volume does expand and contract equally there is another source of temperature error that does not affect the high and low pressure sides of the transmitter symmetrically.

The second source of temperature error occurs when a capillary system is installed vertically. There is a head pressure exerted on the low pressure side of the transmitter from the fluid in the capillary.

The fluid density in the capillary fluctuates with a temperature change so the head pressure varies. While balanced systems can cancel out the changes in volume within the system due to equal lengths of capillary, they cannot compensate for the density change since the low pressure side is mounted at a higher elevation than the high pressure side.

With an asymmetrical capillary system, the two errors work in opposite directions. The asymmetrical design minimizes the fluid on the high side to counteract the temperature induced density that occurs with vertical installations.

For example, in an asymmetrical system with an ambient temperature increase, the fluid expands so there is negative shift but the density decreases so there is positive shift. The total cumulative temperature effect is a lower total error since the induced density effect works in the opposite direction from the expansion effect.

In the case of pressure transmitter, mounting it above the tap can compensate for these errors by offsetting the two sources of temperature error. In cases where more accuracy is desired a second capillary can be added to a pressure transmitter with the second seal mount at the same elevation as the measuring seal to compensate for both effects.

9.2.4 Fill Fluids

Care should be taken to ensure that the fill fluid operates over the temperature range. The ideal fill fluid should have a low vapor pressure, thermal expansion coefficient, and viscosity, as well as being stable at high temperatures and vacuum conditions.

The fluid should be compatible with the process. For instance, fill fluids that use hydrocarbon compounds should not be used in oxygen or chlorine service.

Provided by : www.spic.ir

Copyright American Petroleum Institute

The maximum temperatures for fill fluids at atmospheric pressure range from 205 °C (400 °F) to over 345 °C (650 °F). The density and viscosity of fill liquids can vary considerably with temperature. Minimum operating temperature need to be considered as well. At low ambient temperatures some fluids become highly viscous or turn into a solid.

At high process temperatures the fill fluid vapor pressure becomes an issue. The fill fluid vaporizes taking up more volume in the seal system and flexing the measurement diaphragm causing the reading to shift upwards from the true pressure.

The operating temperature of fill fluids can be exceeded and still provided accurate readings as long as the fill fluid is not thermally decomposing. The process pressure has to be above the fill fluid vapor pressure. However, this practice has limited usefulness because, once the pressure drops to the fill vapor pressure, the readings become progressively less inaccurate as the pressure continuous to fall. Permanent damage to the seal diaphragm can result.

Similarly, when operating under a vacuum, the operating temperature decreases with fill fluids. The diaphragm seal fill fluid starts to vaporize as the pressure is lowered. To properly determine the operating limits of a fill fluid, a temperature a vapor pressure versus temperature plot should be used.

Conversely, fill fluid thermal contraction occurs at low ambient temperatures which can cause the diaphragm to bottom out on the seal housing. This causes the instrument to cease registering.

9.2.5 Time Response

Diaphragm seal systems can have time response issues. Ordinary seal systems can have time constants greater than six seconds if not properly sized. It should be understood that some of the techniques used to limit temperature effects tend to increase the response time. A small diameter capillary, combined with low vapor pressure, viscous, high molecular weight fluid, restricts the flow and slows the measurement.

To obtain an acceptable response time, the viscosity of fill liquids should not exceed 200 cSt. To limit these effects heat tracing and insulation of the capillary might be needed to keep the fill fluid at a consistent density and a low viscosity. Plus, tracing to a constant temperature allows most of the temperature expansion error to be zeroed out.

It is recommended that calculations be made specific to each installation to correctly evaluate both the temperature effects and the time response. In critical applications it might be necessary to test the system response time.

9.2.6 Vacuum Applications

Vacuum applications present a special problem for diaphragm seal use. Fill fluids usually have a separate temperature range specified for vacuum conditions. The measured vacuum could be less than the fill fluid vapor pressure. Air can leak into the seal so it should have a fully welded construction. The following are some methods for protecting a seal system in vacuum conditions.

— Use a high temperature fill fluid.

— Use a 100 % welded construction for vacuums below 41.4 kPa[a] (6 PSIA).

— Use vacuum degassed oil.

— Mount the transmitter 1 m (3 ft) or lower below the tap.

The actual head pressure should be calculated by multiplying the vertical distance between the bottom tap and transmitter by the specific gravity of the fill fluid to ensure that the fill fluid is above its vapor pressure.

As the pressure moves closer to a full vacuum, acceptable accuracy levels become difficult to achieve. This is due to the fact that most fill fluids contain microscopic amounts of trapped air and gases, which tend to expand significantly as absolute zero pressure is approached.

Provided by : www.spic.ir

Copyright American Petroleum Institute

9.2.7 Pressure Gauge Diaphragm Seals

Diaphragm seals are frequently used with pressure gauges. Gauges are fabricated from stainless steel or brass so corrosion is prevented by a diaphragm seal. Diaphragm seals can be used to protect the gauge from freezing. They prevent Bourdon tubes from trapping solids and other unwanted material. Lastly, the seal is the primary pressure boundary while the Bourdon seal serves as a secondary containment.

Pressure gauge seal assemblies usually consist of a diaphragm and a holder into which the gauge is threaded. The diaphragms should be welded to the diaphragm holder. Since they can be accidentally removed, they should be provided with a retaining clip, thread locker, or seal welded to prevent the gauge from accidentally being twisted off the upper seal housing.

9.2.8 Installation

Diaphragm seals should be installed to permit instrument calibration and process tap cleaning without process liquid release or removing the seal. Diaphragm seals should be provided either with dual tap bleed rings or lower housings with flushing connections.

For safety in some services (e.g. coke cutting) to minimize exposed piping and leak paths, a diaphragm seal can be bolted directly to the flange attached to the process root valve.

Capillaries should be routed so that their minimum bending radius is not exceeded. Further, they should be protected from kinking while in operation. Additionally, capillaries should be protected from uneven heating by the sun or from nearby equipment. To avoid noisy readings, it is recommended that the capillary be tied down to minimize vibration and movement; e.g. caused by a strong wind. In the case of diaphragm seal level transmitters, the excess capillary at the lower tap should be coiled around a protective reel. See Figure 63 showing the installation of capillary systems.

Since they are easily damaged, the flange mounted diaphragms should be covered until final installation. Even touching the diaphragm can damage it. Lastly, to avoid transmitting unnecessary stresses to the diaphragm, the flange bolts should not be over-tightened.

9.3 Barrier Fluids and Seal Liquids

Liquid seals are used to protect the instrument from the effects of high temperatures, corrosive, or freezing conditions. Figure 29 shows typical installation details intended for the use of liquid seals.

It is recommended that liquid seals be used only when necessary, since even the best of them get diluted with time or lost during process upsets. Measurement problems can occur when non-condensable gases become dissolved in the reference leg or sensing lines. Accumulated gases can come out of solution during an abrupt depressurization, causing the fill to swell and come out of the reference leg or sensing line.

If a hydrocarbon stream contains water, the liquid in the impulse lines separates into two phases causing errors. For instance, with a differential pressure flow meter, different amounts of water could accumulate in the impulse lines producing a measurement error. To prevent this, the lines can be filled with an immiscible liquid. Ethylene-glycol and water mix also could be used, but errors eventually occur due to uneven dilution.

9.3.1 Seal Liquid Selection

Mercury was once considered an ideal seal liquid because of its high vapor pressure and high density. The use of Mercury is no longer allowed due to its health effects and its ability to cause liquid metal embrittlement. The ideal seal liquid has the following characteristics:

a) non-toxic and FDA approved;

b) specific gravity higher than vacuum column bottoms;

Provided by : www.spic.ir

--`,,`````,,,`,,`,`,,,,,,`````,,,-`-`,,`,,`,`,,`---

Copyright American Petroleum Institute

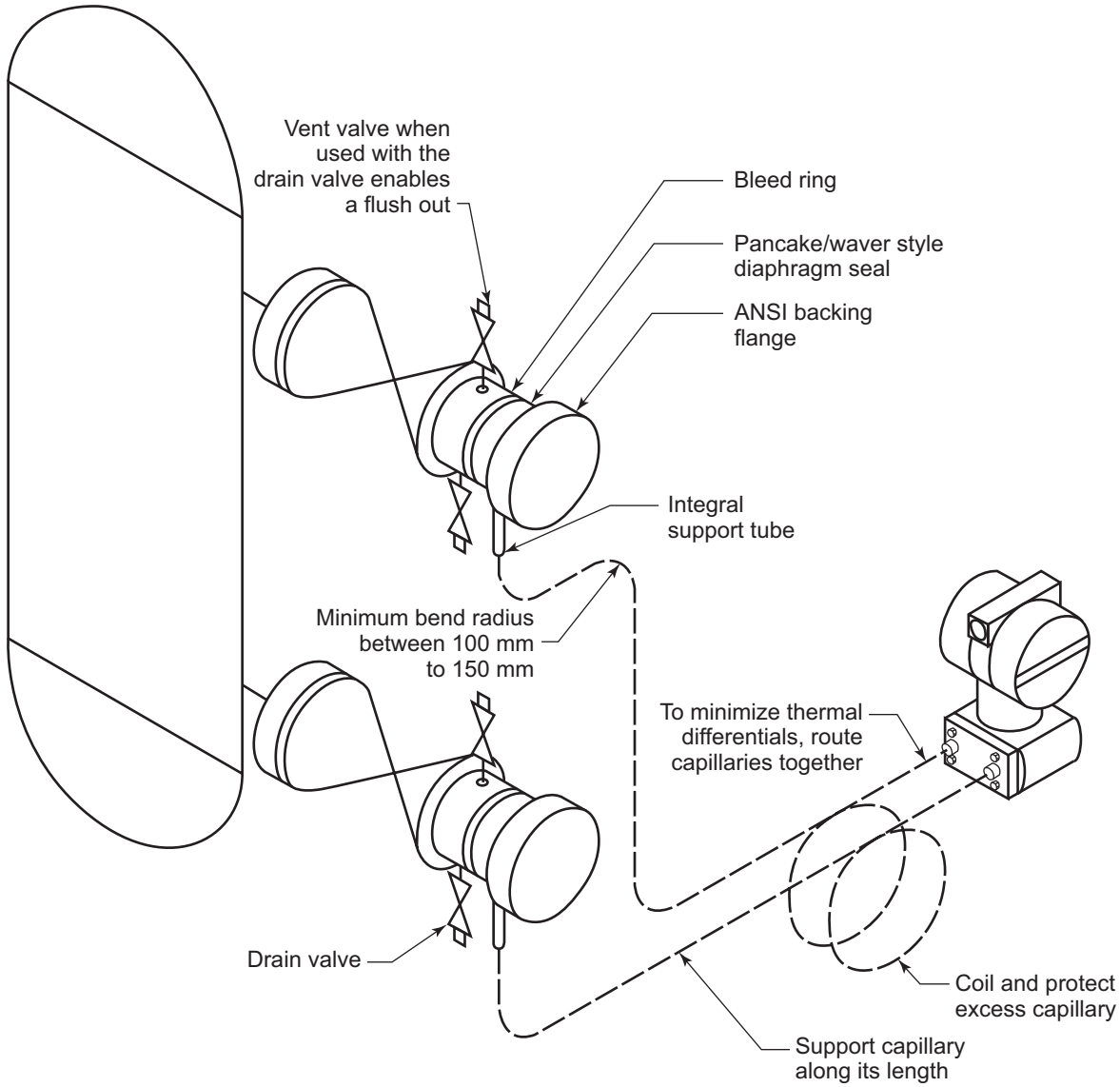

Figure 63—Level Transmitter with Capillaries

c) non-flammable;

d) inert particularly with olefin compounds and asphaltenes;

e) insoluble with water and hydrocarbons;

f) low vapor pressure at high temperatures;

g) low viscosity;

h) freezes below –40 °C (–40 °F);

i) thermally stable at extreme temperatures;

j) readily available.

Provided by : www.spic.ir

Copyright American Petroleum Institute

No compound has every characteristic. However, some liquids have more advantages than others. Further, some of the customary liquids require reassessment.

Material Safety Data Sheets (MSDS) should be used as a guide for evaluating seal liquids. However, it should be recognized that with few exceptions, every liquid has some degree of hazard. The hydrocarbons processed in a refinery have similar or higher hazards than most seal liquids. Seal liquids should be judged if out of the ordinary handling procedures are necessary or there is difficulty in disposal.

Regardless, whenever non-process liquid seals are used, permanent warning tags or a special paint color should be used to indicate the seal liquid that is present so a correct replacement can be provided and when it is drained acceptable disposal occurs.

Below is a listing of some possible seal liquids.

— Ethylene-glycol and water is among the most widely used seal liquid with hydrocarbons. Ethylene-glycol has a slight toxicity. It is inexpensive, and depending on the blend does not freeze until –51.1 °C (–60 °F). The specific gravity is 1.08. As it becomes more diluted with water, its ability to protect against freezing is lost. Further, dilution of wet legs in level transmitters causes readings to be 8 % higher than the actual level. Figure 64 shows a plot of ethylene-glycol and water mixtures versus their freezing points.

  Also, vacuum column residuum and extra heavy crude oil have specific gravities significantly higher than one. In these cases the ethylene-glycol and water mix could be displaced resulting in the true level being higher that the apparent reading.

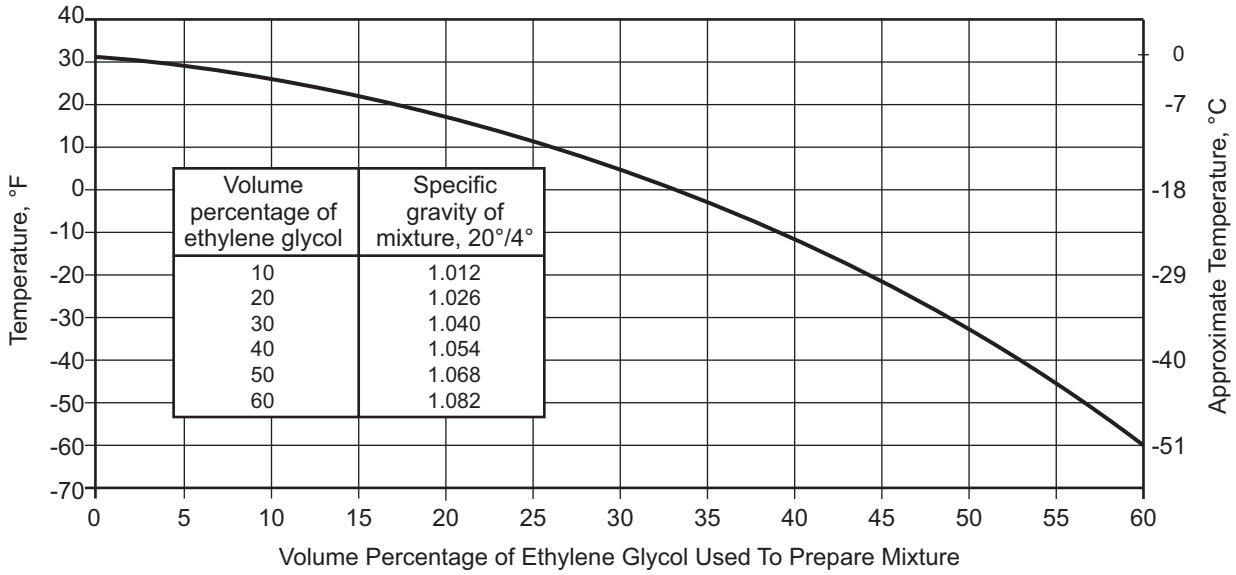

Figure 64—Freezing Points of Ethylene Glycol and Water Mixtures

— Condensate is commonly used to protect instruments in steam service. It is self-regenerating. However, the surface could flash when there is sudden and significant drop in pressure. This has resulted in steam flow measurement problems. When steam traced, liquid loss from boiling in the wet leg results in liquid level readings that are higher than the actual.

— Dibutyl-phthalate has been used for years as a seal liquid for water, steam, and condensate. It is still available as a manometer fluid. It has moderate health effects. but is highly toxic to marine life. A respirator and gloves are needed for handling. Other alternatives should be given priority.

Provided by : www.spic.ir

--`,,,`````,,,,``,,,,`,`````,-`-`,,`,,`,`,,`---

Copyright American Petroleum Institute

— Polychlorotrifluoroethylene is available as a Food and Drug Administration approved liquid, but it is soluble with hydrocarbons and reacts violently with amines so it should not be used as a seal liquid.

— PFPE (perfluopolyether) oil is inert, insoluble with hydrocarbons and water, has a S.G. of 1.9, and has no measurable vapor pressure to 290 °C (550 °F). It has the highest decomposition temperature at 345 °C (650 °F) and has an acceptable viscosity.

— Mineral Oil also known as baby oil, consists of highly refined hydrocarbons and has specific gravity 0.90, has a low vapor pressure, and is safe for humans. Still, it is soluble with other hydrocarbons and is displaced by water so its density over time becomes uncertain. It is not recommended as a seal liquid in petrochemical facilities.

— Hydrocarbon Process Liquid has specific gravity from 0.50 to 0.90, is soluble with other hydrocarbons, and is displaced by water so its density over time becomes uncertain. For wet legs when displaced by water, the instrument reading is less than the true value. Trace amounts of water is common in refinery streams, so a wet leg using hydrocarbons seal fluid can easily become contaminated in refineries. It is not recommended as a seal liquid for most applications in refineries.

  Still, if the process is consistently water free, the process fluid is an acceptable seal liquid. So it is a desirable seal liquid in NGL plants, LNG facilities, and downstream petrochemical facilities. The liquid cools in the impulse lines so the instrument is not subjected to the process temperature. A fresh supply is readily available in the event that the seal is lost. It self regenerates if it condenses at a temperature greater than the ambient conditions.

  Light hydrocarbons present their own problems as seal liquids at low pressures. For instance, flashing occurs upon a pressure drop with a propane vaporizer resulting in a seal liquid loss so the true level is lower than the instrument reading.

9.3.2 Gauge Siphons

Siphons are self-regenerating condensate seals that protect an instrument from steam or other hot condensable vapors. Siphons or “Pigtail” are frequently used with pressure gauges but can be used with other instruments as well. Labyrinth siphons designed for tight coupling are also available.

The siphon works by cooling the condensable vapor creating a protective liquid barrier. Once the liquid barrier is established, subsequent condensate drains into the process. However, siphons are prone to trapping non-condensable vapors which can cause the reading to oscillate. It is recommended that the instrument be mounted above the process connection with its tap facing downwards. If the instrument is traced, the tracer temperature should be below the boiling point of the liquid in the siphon.

Diaphragm seals are often provided rather than siphons. Diaphragm seals have the advantage that they protect the instrument from freezing. (See 9.2.7 concerning the use of diaphragm seals with pressure gauges.) They provide a more compact installation with less vibration problems and stress at the piping root. However, steam temperature >315 °C (600 °F) exceed the temperature of fill fluids so a siphon is necessary in this situation. Figure 65 illustrates the differences between the two methods of high temperature protection.

9.4 Purges

9.4.1 General

Some measurements are only achievable by purging. Purges work by continuously forcing the process fluid out the pipe tap. The purge fluids can be a gas or a liquid. They should be clean and non-corrosive.

Provided by : www.spic.ir

-`,,,`````,`,`,```,,`,`````,-`-`,,`,,`,`,,`---
Copyright American Petroleum Institute

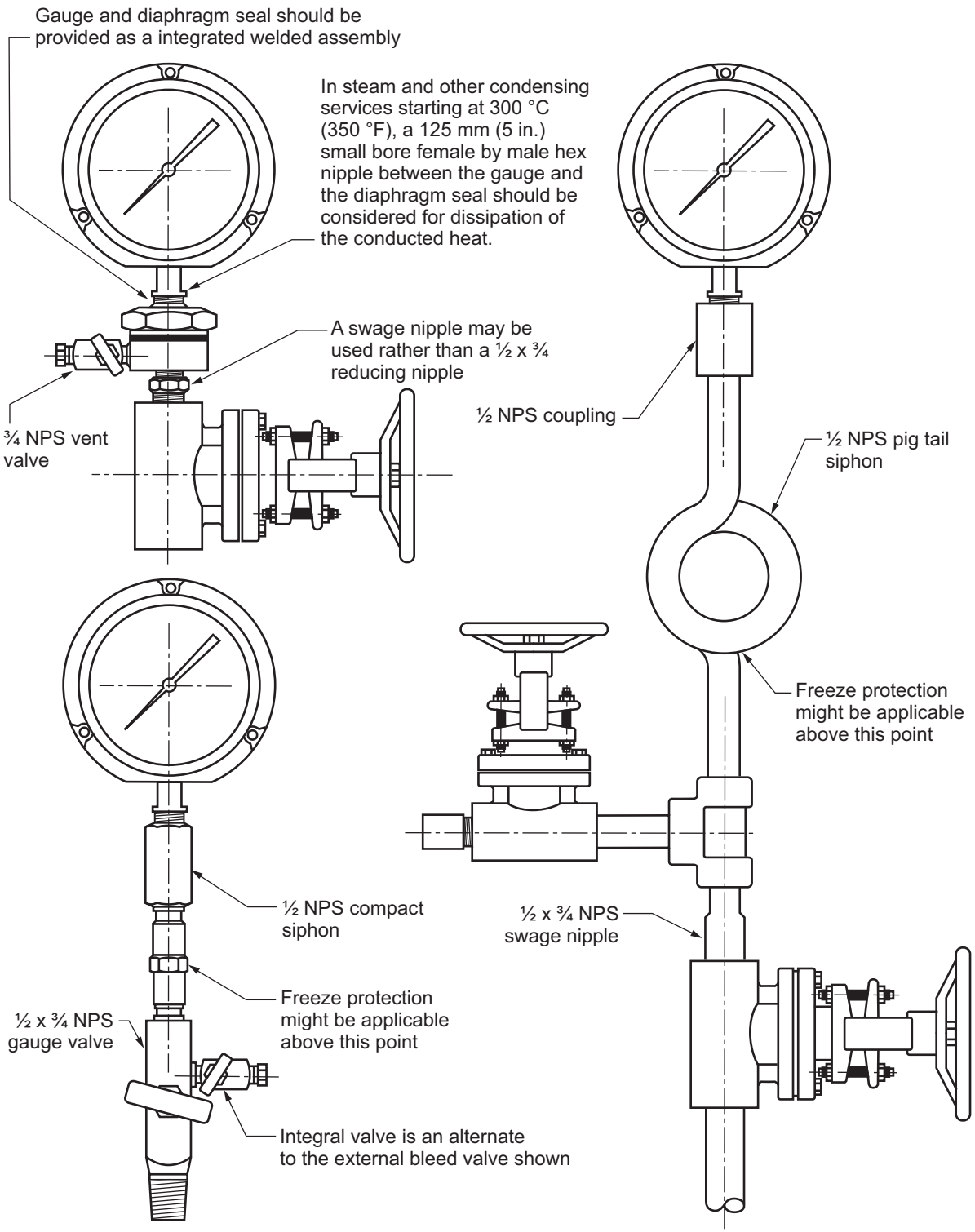

Figure 65—Pressure Gauge Installations

Provided by : www.spic.ir

Copyright American Petroleum Institute

Purge systems are commonly used on the following services:

— solidifying or condensing fluids;

— slurries;

— corrosive fluids;

— temperatures ≥315 °C (600 °F).

There are limitations to what purging can achieve. Purge systems do not necessarily eliminate the need for heat tracing. High pour point purge fluids might require heat tracing for viscosity control. Further, it should be recognized that purges take away from unit capacity, can reduce product purity, and when sourced externally, are often charged against the unit.

9.4.2 Purge Fluids

The purge fluid should be compatible with the process. The purge fluid should not cause a fluid state change (i.e. flashing, condensation, or solidification) of the process or purge fluid.

Purging requires a fluid at a pressure higher than the maximum process pressure. This ensures continuous flow into the process tap. To ensure reliability, a source independent of the process is preferred so that it is available during upsets and shutdowns.

Except for bubblers, it is recommended that liquid purges be used with liquid streams for low range signals; e.g. differential flow transmitters. The difference between the kinematic viscosities of the gas and the liquid, as well as surface tension effects, make abrupt variations in pressure difficult to counter. The metered fluid can intermittently enter the leads and cause noisy differential pressure signals. The noise can be reduced by increasing the purge rate, but this increases the possibility of unequal pressure drop in the impulse lines. Gas purges into liquid streams can also cause velocity and density errors with flow meters downstream from the purge point.

Table 20 lists purge fluids used in a typical refinery with their relative advantages and disadvantages of each fluid. However, every facility is different and its purge fluids should be selected based upon the specific circumstances, particularly with regards to metallurgy and process compatibility. Also, the operating expense of each fluid is site specific.

Nitrogen should not be used as purge or motive fluid which vents into enclosed spaces that are easily accessible. Otherwise, an oxygen depleted environment could occur that is hazardous to personnel.

9.4.3 Purge Flow Rates

Effective purge rates vary depending on the type of service. To ensure minimum backflow, higher rates to prevent backward diffusion could be needed for corrosive and condensing services. Rat holing occurs on streams that are being protected from solids blockage. This effect continues until the flow rate and the area reaches an equilibrium that prevents further blockage. Further, a higher temperature process stream has a higher diffusion rate, which often requires a higher purge velocity.

For clean process fluids, typical purge velocities for liquids range from 0.25 cm/sec to 1.2 cm/sec (0.1 in./sec to 0.5 in./sec) and for gases they range from 2 cm/sec to 30 cm/sec (1.0 in./sec to 12 in./sec). Exceedingly low purge rates can be difficult to maintain. Gas flow rates should be boosted as the purge temperature and pressure increase. The changes in gas density can offset some of the pressure effects, but not completely because head flow regulation depends on the square root of the density.

Provided by : www.spic.ir

Copyright American Petroleum Institute

Table 20—Purge Fluids

Typical Purge Fluid	Advantage	Disadvantage
Steam	Available at highest pressures, low or no operating expense, available throughout the unit.	Condensate slugs a problem, adds to sour water load. Can contain pipe scale.
Natural Gas/Pilot Gas	Typically available at higher pressures. Often clean and liquid free. Constant composition and reliable.	Not available at the point of need. Has some operating expense. Not condensable, can take away from unit capacity.
Fuel Gas	Has a moderate operating expenditure.	Not available at the point of need. Often wet and the composition changes. Polymers can occur.
Nitrogen	Available at the point of need and at higher pressures. Clean and liquid free. Constant composition and reliable.	Has high operating expense. Not condensable, takes away from unit capacity.
Air	Available at the point of need and at an intermediate pressure. Constant composition and mostly reliable.	Non-safe with hydrocarbons. Has some operating expense. Can be wet. Can contain pipe scale. Promotes corrosion.
Boiler Feed Water, High Pressure Condensate	Available at the highest pressure. Constant composition and mostly reliable.	Not always available at the point of need. Adds to sour water load. Has high operating expense. Can contain pipe scale or corrosion inhibitors. Can promote stress cracking in sour gas and other streams.
Clean Product, either Liquid or Gas	Has a moderate operating expense and is the one of the most effective purge fluids in a refinery.	Often not available at upstream pressures. Not available at the point of need. Takes away from unit capacity. Lost on unit shutdowns. Tracing needed on high pour point fluids.
Dedicated Pump Seal Flush System	Available at the point of need and at high pressure. Has moderate operating expenditure. Clean.	Takes away from unit capacity. Can have a low flash point resulting in noise. Possible product contamination.
Unit Feeds, either Liquid or Gas	Does not necessarily take away from unit capacity. Has a moderate to no operating expense.	Not available at the point of need. Moderately reliable. Possible product contamination. Tracing needed on high pour point fluids.

Care should be exercised in setting purge rates to orifice flanges since an orifice tap is drilled to a diameter of 6 mm, 10 mm, or 12 mm ($^1/_4$ in., $^3/_8$ in., or $^1/_2$ in.) depending on the process pipe size. To avoid unacceptable pressures losses with a 6 mm ($^1/_4$ in.) diameter, high purge rates should be avoided.

Figure 66 shows recommended purge rates for the various taps in ASME B16.36 orifice flanges. The flow rate on an orifice meter installation should be the same to each tap.

9.4.4 Purge Control

The purge fluid should be controlled at a fixed rate. Typically, restriction orifices or purge meters with integral needle valves are used to control flow. Sometimes for high pressures, multi-head adjustable stroke plunger pumps are used to regulate flow.

Provided by : www.spic.ir

Copyright American Petroleum Institute

Use either 1/2 in. or 3/4 in. NPS pressure taps with a 12 mm (1/2 in.) drill for ≥4 in. pipe; 10 mm (3/8 in.) drill for 3 in. pipe; and 6 mm (1/4 in.) drill for ≤2 pipe.

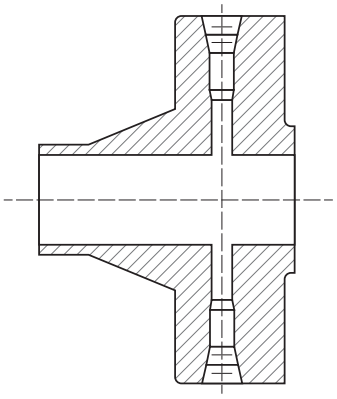

NPS	Drill		Gas Flow		Liquid Flow	
	inches	mm	ft³/hr	M³/Hr	GPH	M³/Hr
≤2 in.	1/4	6	1	0.03	3	0.01
3 in.	3/8	9.5	2	0.06	5	0.02
≥4 in.	1/2	12	5	0.14	6	0.02

Figure 66—Recommended Purge Rates for Various Orifice Flange Tap Sizes

The following types of flow restrictors are typically used:

a) restriction orifices;

b) drilled gate valve;

c) sintered metal restrictors;

d) coiled capillary tubing;

e) tapered metering valves.

Restriction orifices provide reliable service when the pressure across them is controlled. Standard flow formulas are used to determine the orifice bore. For beta ratios greater than 0.2, a flow coefficient of 0.65 should be used. The smaller orifice sizes are normally rounded to the nearest standard drill size. Orifices smaller than 1/8 in. should be provided with upstream strainers.

However, for gas purges with pressure above the critical pressure ratio, orifices normal sizing procedures are normally not applicable. At sonic conditions, the flow can vary up to 11 % as the downstream pressure is reduced. In these cases, a different device (e.g. flow nozzle or flow regulator) should be used or the flow should be determined by testing.

Alternately, to avoid the need for a strainer, calibrated sintered restriction elements can be used. Their cross-sectional is the same as the nominal line size so there are fewer tendencies to entrain solids because velocities are kept low and those few solids that do accumulate cannot block the entire cross section of the element.

The flow rate through a sintered element is a function of its length and the differential pressure. It is less sensitive to variations in pressure since the flow varies linearly with pressure rather than increases on a squared basis. Additionally in gas service, these devices are not affected by critical flow restrictions.

Provided by : www.spic.ir

Copyright American Petroleum Institute

For flow measurement, a purge variable area meter is used. (See 6.3 concerning the application of variable meters.) Unless low pressure water is being used, an armored type variable area meter is recommended for safety. For a 3/4 in. process connection, a purge variable area meter with a range of 0.38 to 3.8 GPH (1.4 to 14 L/Hr) of water or 0.2 to 2.0 ACFH (6.0 to 60 L/Hr) of air typically is satisfactory. Errors from excessive purge flows can be detected by momentarily stopping the purge and observing the instrument output.

Where the pressure at the point of measurement varies appreciably, a differential pressure regulator should be used in conjunction with a restriction orifice or a purge meter and needle valve to ensure a constant flow. The application of self-contained pressure regulators are limit by elastomer operating temperatures which is ≤232 °C (450 °F). Regardless, externally connected differential regulators are available for that can operate ≥343 °C (650 °F).

Purge blocks manifold are available which combine a check valve, filter, flow restrictor, bypass valve, and needle valve into one package. These devices are equipped with an ASME Accuracy Grade A gauge with a 1 1/2 in. dial to assist in adjusting the flow and detecting plugging. The flow restrictor is either a restriction orifice or capillary tube. The former is used when exceptionally low flow rates are desired.

9.4.5 Purge Piping

Purge fluids can be introduced anywhere along an impulse line. However, it is preferred to add them by the process tap with the purge piping directly aligned with the root valve and the instrument impulse line entering at a right angle. This minimizes the pressure drop. Otherwise, to minimize measurement errors, the impulse lines should be keep short and the purges should have a regulated flow.

Sometimes for access and convenience the purges are injected into instrument manifolds or transmitter body flanges, but the purge flow rate should be kept low and constant. The flowing differential pressure of a purged instrument process line, measured from the connection at the instrument to the first instrument process line valve, should not exceed 1% of the instrument range. This loss can be cancelled with differential flow transmitters with equal length impulse lines.

Avoid cross-sectional area changes in the impulse lines. Furthermore, both the high and low pressure instrument connections should be of the same length and have the same number of fittings and bends.

Provision should be provided for draining condensed liquids from gas purge systems at low points in the piping system.

Instruments purged with liquids lighter than the process fluid should be mounted above the process taps. Similarly with gas purges, instruments in gas or liquid services should be above the process taps. Figure 67 shows typical purging arrangements. Also, see PIP PCIGN200 for purge details.

10 Instrument Heating and Climate Protection

10.1 Introduction

This section describes heating techniques for protect instruments from adverse process and climate conditions. Heating is used to prevent a process fluid in an instrument and its impulse line from freezing or becoming too viscous.

Fireproofing is not included in the scope of this document; rather refer to API 2218 for practices related to instrument fireproofing.

Climate Protection Services are liquids that contain water or other fluids that freeze or form hydrates at low ambient temperatures.

Provided by : www.spic.ir

Copyright American Petroleum Institute

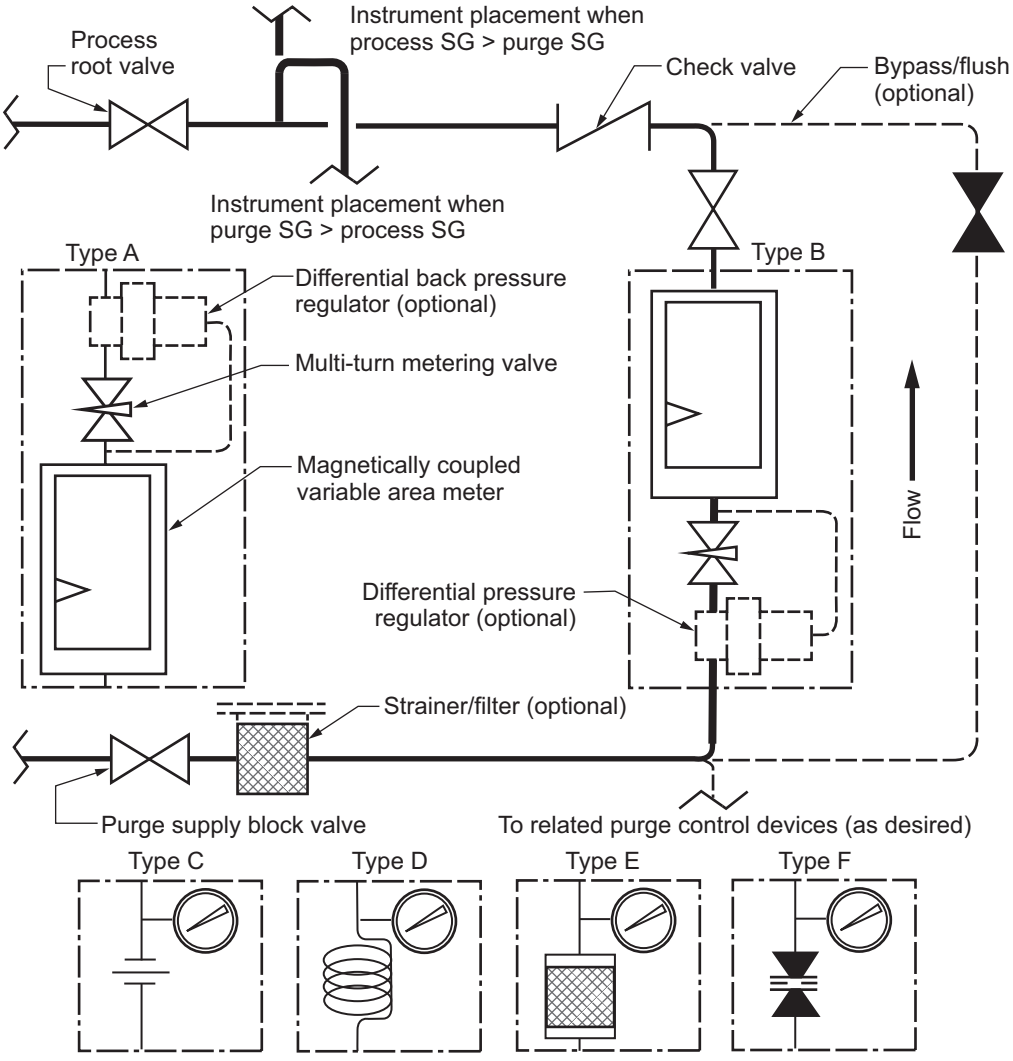

Type	Description
A	Purge meter with a constant upstream pressure
B	Purge meter with constant downstream pressure
C	Restriction orifice
D	Capillary restrictor
E	Sintered metal restrictor
F	Drilled gate

NOTE 1 Strainers/filters are recommended for capillaries, sintered flow restrictors and restriction orifices smaller than 3 mm (⅛ in.).

NOTE 2 Differential regulators are recommended when either the purge supply or process pressure causes the purge flow rate to vary by more than ±10 %.

NOTE 3 Drilled gate restrictors do not require a bypass/flush valve.

NOTE 4 The check valve and the piping downstream of that should be suitable for the process.

NOTE 5 The purge supply piping can be shared with the related services such as the second tap on a level or flow transmitter.

NOTE 6 Bypass/flush lines are recommended for Type C through E so that system can be tested for pugging by using the pressure gauge.

Figure 67—Purge Installations

Provided by : www.spic.ir

Copyright American Petroleum Institute

Viscosity Control Services are situations where the liquid in the impulse line becomes too viscous to measure effectively at ambient temperatures. Designing for a maximum viscosity of 200 cP is recommended. Liquids at their pour points are too viscous to measure effectively.

Condensation Protection Services exist when liquids can condense in undesirable locations.

10.2 General

Instruments and their impulse lines often require electric or steam heat tracing to ensure a usable measurement. Dedicated tracers should be provided for each instrument tap and its associated impulse piping and instruments. Additional tracers could be needed for particularly complicated or critical services. For instance, separate tracing of the instrument and its impulse line could be needed to ensure coverage on a safety system.

When heat tracing is used, some considerations include the following.

a) The tracing medium should provide sufficient heat for a measurement but not cause degradation of the process fluid.

b) If heat tracing does not provide the needed fluid conditioning, other techniques such as diaphragm seals, purging, or liquid seals should be used.

c) The heat tracing should be controllable. For electric tracing this is usually accomplished by a temperature controller or current limited tracers. Steam heat tracing is normally controlled by limiting the steam pressure, but steam temperatures less than 150 °C (300 °F) normally are not practical.

d) Instruments have maximum temperature limits. Typically, for electronics this is 93 °C (200 °F) or less and about 120 °C (250 °F) for transmitter bodies.

In refining, almost all hydrocarbon streams undergo steam stripping so facilities in freezing locations consider their liquid hydrocarbon streams to be water bearing. In refinery services, instruments are often traced while their associated process lines are not. Instruments impulse lines are dead ends that cool to ambient conditions and have to be traced to avoid freezing. On the other hand flowing lines do not freeze because there is not enough time to cool.

The need for housings, heating and insulating instruments, and impulse lines depends on the severity of the local winters. In existing plants, past experience normally determines the protection needed. Where experience is not available, local weather data should be used.

To ensure that the instruments remain operable under the most severe conditions, the design should be based on the lowest temperature at the maximum wind velocity.

Conversely, in gas processing plants, LNG facilities and downstream petrochemical facilities hydrocarbon streams are essentially dry. In these facilitates the tracing of hydrocarbon lines is almost exclusively used to prevent undesirable condensation.

In designing a tracing system, it is necessary to consider the following.

a) For climate protection services, preventing the water from freezing is the intention. The recommended design temperature is 10 °C (50 °F). This ensures that extra heat is available if the trace is briefly out of operation. These tracing systems are active only during the winter months when freezing weather is expected.

b) To avoid damping the measurement the temperature of a fluid, like vacuum heavy gas oil, is maintained high enough to ensure a viscosity of ≤200 centipoise. These tracers operate year round. Process chemicals such as phenol, which solidifies at 41.1 °C (106 °F), require continuous tracing as well.

Provided by : www.spic.ir

Copyright American Petroleum Institute

c) In condensation protection services, tracing is provided to prevent liquid from forming in impulse lines. Process stream analyzers and their sampling systems are an example. Another example is the impulse lines on the discharge of wet gas compressors. Some of these services can operate at the upper end of the allowed tracer design temperature. These tracers also operate year round.

d) For instrument capillaries, tracing provides viscosity control to ensure responsive operation or density control in the case of low measurement spans. These tracers operate year round as well.

10.3 Electric versus Steam Tracing

The most common heating methods are electrical and steam tracing.

10.3.1 Electrical Tracing Advantages

Electric tracing has the following advantages.

a) Electric tracing can maintain a broad range of temperatures from a few degrees above ambient to 500 °C (930 °F).

b) Unlike steam, electrical tracing has the ability to provide minimal heat.

c) It is possible to accurately maintain the desired temperature.

d) There are no fittings or traps that could leak or require maintenance.

e) Individual tracers are more reliable and easier to monitor.

f) Tracer installation is simpler.

g) Electrical supplies are easier to route and do not tend to be an obstruction to operations and equipment maintenance.

h) Purposed design digital controllers with serial communications are available.

i) Standards and agency certifications help ensure a consistent installation.

Electric tracing is often recommended for use with temperature sensitive materials that should be maintained within a narrow temperature range; e.g. caustic and amine.

10.3.2 Electric Tracing Limitations

Electric Tracing has the following limitations.

a) Standard electric heat tracing for temperature maintenance has a slow heat-up period after an emergency shutdown or a plant turnaround.

b) The number of tracers dramatically increases as the process maintenance temperature approaches the electrical T-rating. In some circumstances the desired process temperature cannot be achieved with electrical tracers.

c) In Division 1 hazardous areas, electric tracing circuits are severely restricted or prohibited.

Provided by : www.spic.ir

Copyright American Petroleum Institute

10.3.3 Steam Tracing Advantages

Steam tracing has the following advantages.

a) The latent heat of steam makes it responsive to start up situations.

b) Steam tracing does not have electrical safety issues so it can be used in Division 1 areas.

c) Low pressure steam is readily available in units with steam flash drums.

d) Steam is a consistent energy source and is available throughout most process facilities.

10.3.4 Steam Tracing Limitations

Steam tracing has the following limitations.

a) A steam supply and a condensate recovery system are needed. Both systems require sloped layouts and have distance limitations. This causes access issues with process valves and equipment maintenance.

b) Tracers operate at a temperature that corresponds to the steam saturation pressure. The minimum practical temperature of a bare tracer is 150 °C (300 °F).

c) Based upon a steam header pressure of 1.83 MPa (700 psig), the maximum practical steam tracer temperature is 260 °C (500 °F).

d) Bare steam tracers are too hot for non-metal or lined piping.

e) Steam tracers require fittings that can develop leaks.

f) Steam traps eventually wear out or malfunction resulting in steam loss. Traps also use additional steam to function.

10.4 Light Steam Tracing

Temperatures that cause boiling or result in thermal degradation should be avoided. This can be a problem with level transmitter wet legs. The danger from overheating can be minimized by using light steam tracing. Light tracing uses insulation to separate the tracer from the process.

Light tracing should be considered for the following conditions.

a) When direct tracing of an instrument is involved.

b) When reducing thermal risk is necessary to comply with safety requirements.

c) When the heat transfer rate should be controlled to prevent corrosion or other unacceptable temperature related conditions.

d) When products; such as caustics, acids, amines, resins, and aqueous fluids require a low uniform heat.

Tracer tubes are available covered with an insulating polymer jacket. The insulation significantly reduces the tracer's surface temperature. However, this type of tubing has a larger bending radius than bare tubing. Insulated tracers are available that comply with ASTM C1055, which requires that human skin contact temperature to be less than 58 °C (136 °F).

Provided by : www.spic.ir

Copyright American Petroleum Institute

A less desirable method of light tracing is using spacers made from inert moisture resistant solid ceramic board or compressed Rockwool.

10.5 Insulation and Protective Coverings

Insulation and protective coverings should be designed to be weather resistant and provide mechanical protection. The system should be installed to minimize insulation damage during maintenance. The design should permit repair or removal of the instrument without damage to either the insulation or sheathing. Asbestos should not be used in any form.

Traced impulse lines should be carefully insulated so they are water proof. Sealant should be used at the temperature measurement point and at the entry into the enclosure. Lastly, bare spots or poorly insulated areas that could allow stagnant material to solidify should be prevented.

Where stainless steel tubing is used, chloride free insulation should be specified to prevent stress cracking.

Site installed insulation is acceptable, but pre-insulated heat-traced tubing bundles simplifies installation and reduces future maintenance problems, still the bending radius of pre-insulated tubing is larger than bare tubing.

Sheath or outer jacket of the insulation of pre-insulated tubing should be a UV resistant thermoplastic. Like electrical cable, tracer sheath requirements vary with the ambient conditions at the facility. The maximum allowable temperature of the sheath and the bundle insulation should be checked against the maximum process and tracer temperatures.

See PIP INEG1000 further information concerning insulation requirements.

10.6 Instrument Housings

10.6.1 General

Insulated enclosures are used for instrument protection. It is recommended that manifold valves be included within the enclosure. Designs are available that enclose instrument valves, manifolds, and special piping configurations (e.g. purges).

There are three basic types of instrument enclosures:

- soft enclosures;
- full molded enclosures;
- partial molded enclosures.

(Typical molded housings and their mountings are shown in detail in Figure 68.)

Molded enclosures are typically made from a UV resistant grade of GRP (Glass Reinforced Polyester) which is strong and corrosion resistant.

Transmitters can be tightly coupled to the process tap by using soft enclosures or partial molded enclosures. Full enclosures can be line mounted for a close coupled installation, but are not practical for tightly coupled installations.

Full enclosures are rainproof and dustproof and meet IP 66 requirements. Soft enclosures are not particularly rain resistant. If installed incorrectly, the rain water could cool the liquid in the instrument below its pour point.

Besides tracers, another method of providing heat inside the enclosure is using a radiant heater. Because the heater is not connected to the instrument, servicing is simpler. They are available in sizes from 50 to 500 watts.

Provided by : www.spic.ir

Copyright American Petroleum Institute

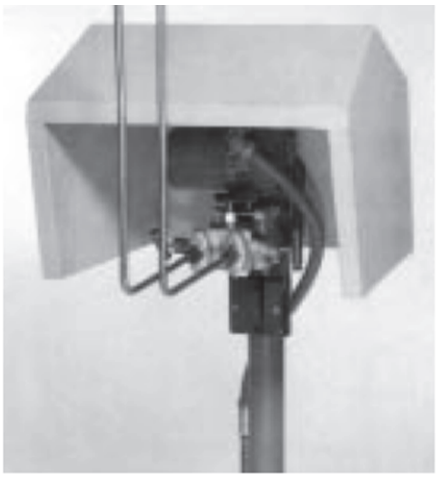

Sunshade

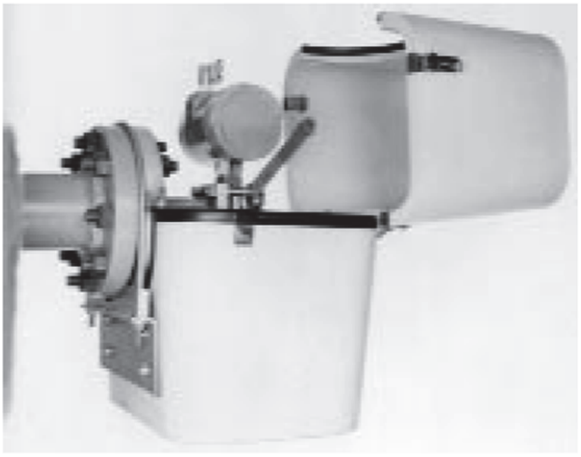

Flange-mounted transmitter

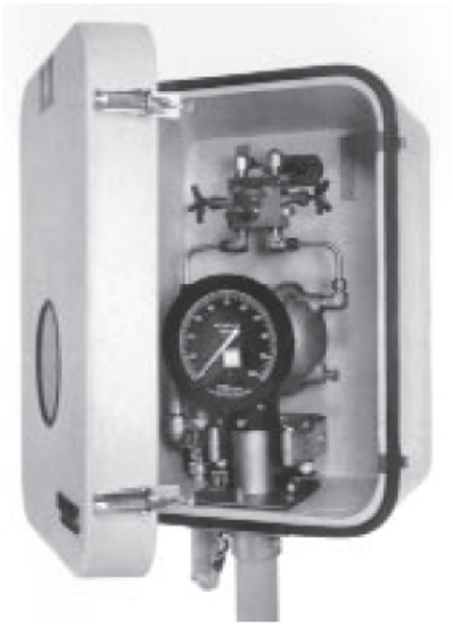

Differential-pressure indicator



Differential-pressure transmitter

Figure 68—Typical Molded Enclosures

Provided by : www.spic.ir

Copyright American Petroleum Institute

Enclosures, regardless of type, should be adequate for the design temperature and wind velocity. The supplier should validate the design to ensure that it operates satisfactorily. Suppliers of instrument enclosures have performance data for their products based upon tests using various temperatures at different wind velocities.

10.6.2 Soft Enclosures

Soft enclosures allow for the insulation and protection of equipment where weight, space, and access concerns exclude the use of molded enclosures. They are suitable for retrofit applications. Typically, they are manufactured from silicone impregnated fiberglass. Fastening methods include hook and eye with stainless steel lacing or hooks and clinch belts.

Soft enclosures have the following features:

— lightweight construction;

— low installation effort;

— custom made for the application.

Insulation thicknesses can be tailored to suit the conditions. Further, by being light they are supported by the instrument process connections. Refer to PIP INSR1000-2011 for further information.

10.6.3 Full Molded Enclosures

Full molded enclosures are almost a universal housing. More than one instrument can be fitted into a single enclosure. They can be mounted for close coupled installations, but do have the disadvantage in that they require more space in a pipe rack.

Installations of this type are successful in the severest climates. Penetrations through the side or bottom of an enclosure should be sealed.

Full enclosures are recommended for weatherproof installations or where the instruments require frequent and easy access. They use integral stainless steel latches and have doors with gaskets.

These housings have enough inside clearance for maintenance. They have lids that diagonally split the box in half allowing convenient access to the instrument. Prop-stays hold the lid in place when it is open. However, significant overhead clearance is needed to swing the lid open. For close coupled installations it might be necessary to mount the enclosure so the lid swings down to obtain the necessary clearance.

Lines and cables enter through the bottom or sides through a metal bulkhead. Internal mounting brackets and observation windows are available. Additional insulation and heating coils can be factory or field installed.

10.6.4 Partial Molded Enclosures

A partial molded enclosure is a compromise between the two types. The partial enclosure fits tightly around a transmitter body and is held together by straps. It takes less space than a full enclosure but it is not as flexible as a soft enclosure. It can be completely removed for maintenance but is specifically designed for each installation.

Because the electronics are external to the insulation, it is possible to trace the transmitter body to a higher temperature. Integral indicators are also visible. Further, cable penetrations are not needed so there is one less point to seal. It also provides more rain resistance than a soft enclosure and is easier to reinstall.

Provided by : www.spic.ir

Copyright American Petroleum Institute

10.7 Viscous Liquids and Condensation Prevention

The difference between climate protection service and viscosity control and condensation prevention services is the temperature needed for the process fluid.

Because of the higher heat density needed for viscosity control services, more insulation should be used. The heat tracer should be in continuous contact with the impulse lines for good heat transfer.

Housings for instruments in viscosity control and condensation prevention services require larger heaters. Consequently, additional protection might be necessary to prevent injuries.

There are instances (e.g. vacuum column bottoms) that the tracing temperature exceeds the temperature rating of the instrument. In these applications, a combination of heat tracing and a diaphragm seal might be necessary.

10.8 Special Applications

The following special circumstances exist.

a) Heated full enclosures are needed in arctic services since the ambient temperature drops below the operating temperature of the instrument electronics.

b) Electric tracing can be used to improve measurement accuracy by maintaining a transmitter at a constant temperature inside a full enclosure. It can also be used to improve the time response of a diaphragm seal system by lowering the fluid viscosity. Tracing can also be used to improve the accuracy of a diaphragm seal system by maintaining a constant temperature along both sides for their entire length.

c) Since they are self-draining displacers, magnetic level indicators and gauge glasses in hydrocarbon services do not need protection from collecting water.

d) It is not considered economical to provide a dedicated tracer for a pressure gauge. Rather, a pressure gauge is provided with a diaphragm seal and tightly coupled to the pipe and insulated.

e) As an alternative to tracing for climate protection, impulse lines can be filled with an insoluble seal liquid.

f) Regardless of the header temperature, condensate filled impulse lines in steam service need to be protected from freezing by tracing or be provided with a non-freezing seal liquid.

g) In viscosity control services, liquid seals or diaphragm seals are often needed to protect transmitters from the tracers as well as the process.

h) Some purge fluids when steam traced (e.g. heavy gas oil) might exceed the instrument temperature rating, so a diaphragm seal or liquid seal might be necessary. On the other hand, electric tracing often has the advantage that its temperature can be set between the viscosity control point and the maximum instrument body temperature.

i) Steam tracing might be the only option when the electrical classification T-rating or the auto-ignition temperature of the hazard causing vapor cannot be met. API 2219 states, “In general, ignition of hydrocarbons by a hot surface should not be assumed unless the surface temperature is approximately 182 °C (360 °F) above the accepted minimum ignition temperature of the hydrocarbon involved.” Accordingly, high process surface temperatures are rational so the use of steam tracing is suitable.

Provided by : www.spic.ir

Copyright American Petroleum Institute

10.9 Electrical Tracing Methods and Materials

Electrical heating is widely used and is trouble-free. Due to its flexibility and reliability, electrical tracing is recommended for offline instruments. Electric tracing can be controlled by electronic controllers, simple mechanical thermostats, or self-regulating cable.

If the temperature controller is set properly and the line tracing is designed for the needed heat distribution, overheating is seldom a problem.

Electronic controllers are available with a variety of features. Multi-circuit digital processor based temperature controllers have been developed specifically for heat tracing. They provide extensive control and monitoring capabilities using digital displays. As many as eighteen heat tracing circuits can be controlled by one device. These controllers can be configured either for process sensing or ambient sensing control.

Real time indication and alarms are provided by using a serial link for temperature, heater current, and ground leakage current. They also can alarm when the RTD has failed.

They have solid state outputs which can be used for either simple on/off control or time-based proportional control. The latter adjusts the amount of heat generated through time sequencing. This reduces energy consumption for ambient controlled systems and provides uniform temperatures when process line sensing is used.

Care should be exercised to ensure that the heating elements are not ignition sources. Tracer cables, relays, and temperature controllers should be suitable for the area classification. Mineral insulated and self-limiting electrically hazard rated cables are available. The surface temperature of the cable should meet either the T-rating or be below the auto-ignition temperature of the hazard causing vapor. Guidance in meeting these requirements is given by NFPA 70, Article 500 and IEEE 515.

The temperature measurement point should be located properly. Mechanical thermostats should be installed so that their settings can be adjusted in place. A means of determining if the cable is functioning should also be provided. Each cable tag should show the panel identification and circuit number as well as the associated device. Each tracer circuit should be powered from an equipment protection type GFCI (Ground Fault Current Interrupter.)

The supplier’s recommendations (e.g. the minimum bend radius) and sealing the components (e.g. the cable ends) should be followed.

Self-limiting cable is the preferred cable type for instrumentation. Hot spots are not a problem. Their service life is 15 to 20 years. The installation is not sensitive to length so voltage regulation is not needed. Their lengths run a meter to hundreds of meters (few feet to hundreds of feet.) They are able to produce temperatures up to 205 °C (400 °F).

Temperature controllers are not necessary with self-limiting cable. Regardless, it is recommended that continuous monitoring be provided for the more important instruments. This could be a simple light at the end of the tracer to indicate continuity or a current transducer that is part of an electronic controller.

The electric tracing method shown in Figure 69 is adequate for most installations.

10.10 Steam Tracing Methods and Materials

Steam tracers should come from a header that is independent of the equipment operation and maintenance or unit shutdown. In subfreezing climates, it might be necessary to take a supply from the main steam header and to provide a pressure regulator that can be adjusted to meet winter and summer ambient conditions.

The temperature of steam tracing circuits can be controlled by the following.

a) Pressure reducing regulators which vary the temperature by changing the saturation pressure of the steam.

Provided by : www.spic.ir

Copyright American Petroleum Institute

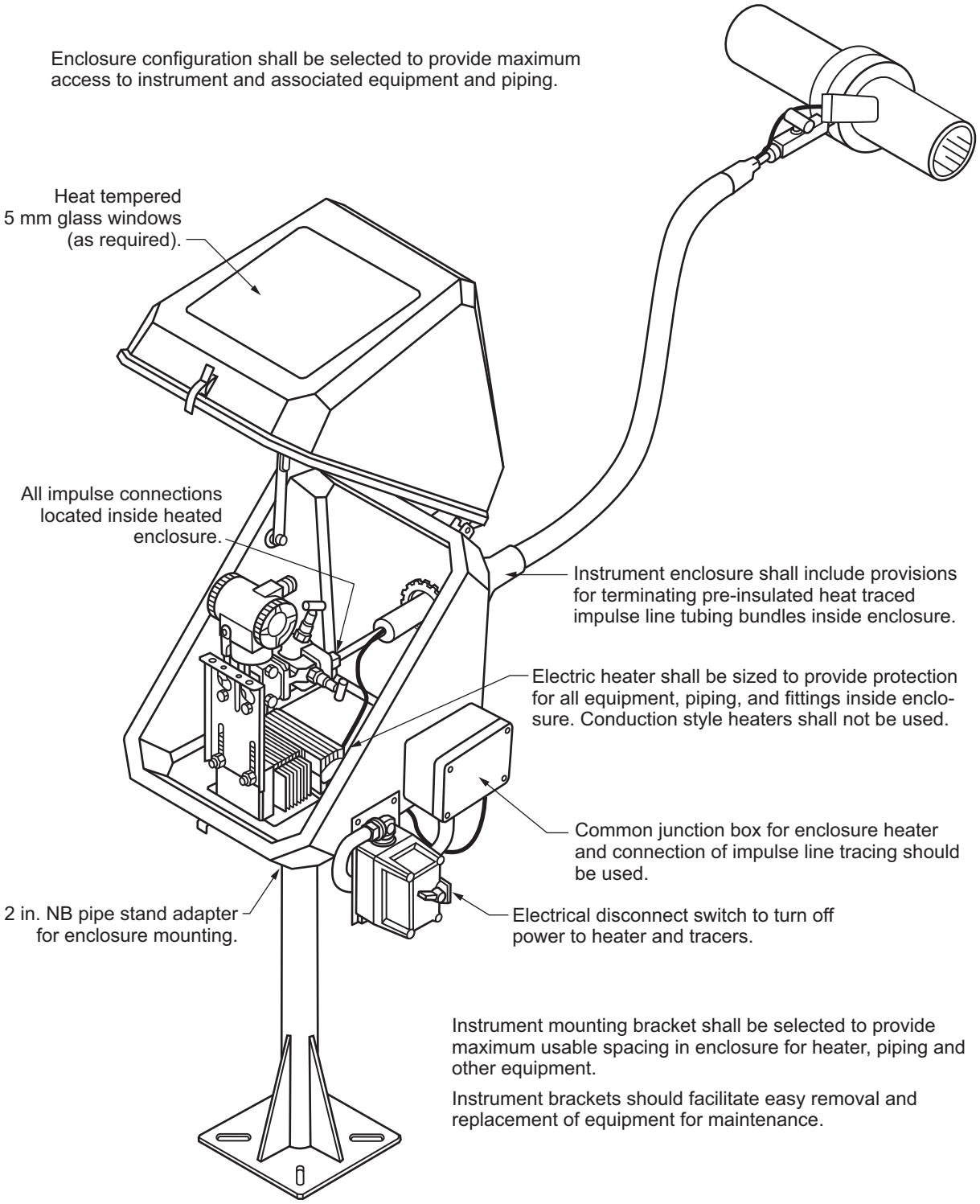

Figure 69—Instrument Electrical Tracing

Provided by : www.spic.ir

Copyright American Petroleum Institute

b) Light tracers which have a low conductive path that reduces the surface temperature.

c) Filled system temperature regulators that respond to the ambient air temperature or the instrument enclosure conditions.

Copper or stainless steel tubing should be provided and sized for the heating requirements. Copper tubing tracers should be UNS Grade C12200 and soft annealed according to ASTM B68-2011 and B75-2011. Stainless steel tubing should be used if the steam pressure is above 1.62 MPa (235 psig) or the item being traced has a maximum temperature above 205 °C (400 °F).

Joints in tracer tubing should be avoided. However, when joints are needed, they should be made outside the insulation using expansion loops to prevent stress on the fittings. To protect personnel, the loops should be insulated. PIP PNSC0035-2011 shows typical tracing details.

The steam supply should be above the device to be traced and be supplied with a shutoff valve. Tracing and condensate recover lines should slope downward continuously to prevent pockets and facilitate draining. Tracers and condensate lines outside of tube bundle should be insulated for heat conservation and personnel protection. A separate trap and condensate isolating valve should also be provided for each tracer. The steam and condensate shutoff valves nearest the instrument should be tagged with its number.

A steam tracing pressure below 345 kPa (50 psig) is not recommended. Tracer pressures less than this are prone to plugging and do not have enough pressure to be recoverable by a condensate system. Where upward flow is unavoidable, steam pressure should be a minimum of 172 kPa (25 psig) for every 3 m (10 ft) of rise.

Heat transfer is increased by using heat transfer cement or mastic. A single tracer using mastic can replace multiple tracers. A bare steam tracer has difficulty maintaining temperatures above 71 °C (160 °F). Poor initial contact between the tracer and the line, which can be further exacerbated by thermal expansion, makes it difficult to maintain an exact temperature.

Provided by : www.spic.ir

Copyright American Petroleum Institute

Bibliography

API Recommended Practice 5A3, *Recommended Practice on Thread Compounds for Casing, Tubing, Line Pipe, and Drill Stem Elements*

API Recommended Practice 552, *Transmission Systems*

API Recommended Practice 554, Part 1, *Process Control Systems Part 1—Process Control Systems Functions and Functional Specification Development*

API Recommended Practice 554, Part 2, *Process Control Systems—Process Control System Design*

API Recommended Practice 554, Part 3, *Process Control Systems—Project Execution and Process Control System Ownership*

API Standard 560, *Fired Heaters for General Refinery Services*

API Recommended Practice 571, *Damage Mechanisms Affecting Fixed Equipment in the Refining Industry*

API Recommended Practice 751, *Safe Operation of Hydrofluoric Acid Alkylation Units*

API Recommended Practice 2216, *Ignition Risk of Hydrocarbon Liquids and Vapors by Hot Surfaces in the Open Air*

API Technical Report 2571, *Fuel Gas Measurement*

API *MPMS* Chapter 4.1, *Introduction*

API MPMS 4.2, *Manual of Petroleum Measurement Standards Chapter 4—Proving Systems Section 2—Displacement Provers*

API *MPMS* Chapter 4.4, *Tank Provers*

API *MPMS* Chapter 4.5, *Master Meter Provers*

API *MPMS* Chapter 4.6, *Pulse Interpolation*

API *MPMS* Chapter 4.7, *Field Standard Test Measures*

API *MPMS* Chapter 4.8, *Operation of Proving Systems*

API *MPMS* Chapter 4.9.1, *Methods of Calibration for Displacement and Volumetric Tank Provers*—Part 1, *Introduction to the Determination of the Volume of Displacement and Tank Provers*

API *MPMS* Chapter 4.9.2, *Methods of Calibration for Displacement and Volumetric Tank Provers*—Part 2, *Determination of the Volume of Displacement and Tank Provers by the Water Draw Method of Calibration*

API *MPMS* Chapter 4.9.3, *Methods of Calibration for Displacement and Volumetric Tank Provers*—Part 3, *Determination of the Volume of Displacement Provers by the Master Meter Method of Calibration Measurement Coordination*

API *MPMS* Chapter 4.9.4, *Methods of Calibration for Displacement and Volumetric Tank Provers*—Part 4, *Determination of the Volume of Displacement and Tank Provers by the Gravimetric Method of Calibration*

Provided by : www.spic.ir

--`,,,```,`,`,```,,`,```,-`-`,,`,,`,`,,`---

Copyright American Petroleum Institute

API *MPMS* Chapter 5.1, *General Considerations for Measurement by Meters*

API *MPMS* Chapter 5.2, *Measurement of Liquid Hydrocarbons by Displacement Meters*

API *MPMS* Chapter 5.3, *Measurement of Liquid Hydrocarbons by Turbine Meters*

API *MPMS* Chapter 5.4, *Accessory Equipment for Liquid Meters*

API *MPMS* Chapter 5.5, *Fidelity and Security of Flow Measurement Pulsed Data Transmission Systems*

API *MPMS* Chapter 5.6, *Measurement of Liquid Hydrocarbons by Coriolis Meters*

API *MPMS* Chapter 5.8, *Measurement of Liquid Hydrocarbons by Ultrasonic Flow Meters*

API *MPMS* Chapter 6.1, *Lease Automatic Custody Transfer (LACT) Systems*

API *MPMS* Chapter 6.2, *Loading-Rack Metering Systems*

API *MPMS* Chapter 6.5, *Metering Systems for Loading and Unloading Marine Bulk Carriers*

API *MPMS* Chapter 6.6, *Pipeline Metering Systems*

API *MPMS* Chapter 6.7, *Metering Viscous Hydrocarbons*

API *MPMS* Chapter 7, *Temperature Determination*

API *MPMS* Chapter 8.2, *Standard Practice for Automatic Sampling of Liquid Petroleum and Petroleum Products*

API *MPMS* Chapter 14.3.3, *Concentric, Square-Edged Orifice Meters*—Part 3*: Natural Gas Applications*

API *MPMS* Chapter 14.3.4, *Concentric, Square-Edged Orifice Meters*—Part 4*: Background, Development, Implementation Procedures and Subroutine Documentation*

API *MPMS* Chapter 14.6, *Continuous Density Measurement*

API *MPMS* Chapter 14.7, *Mass Measurement of Natural Gas Liquids*

API *MPMS* Chapter 14.8, *Liquefied Petroleum Gas Measurement*

API *MPMS* Chapter 14.10, *Measurement of Flow to Flares*

API *MPMS* Chapter 16.2, *Mass Measurement of Liquid Hydrocarbons in Vertical Cylindrical Storage Tanks By Hydrostatic Tank Gauging*

API *MPMS* Chapter 20.1, *Allocation Measurement*

API *MPMS* Chapter 20.3, *Measurement of Multiphase Flow*

API *MPMS* Chapter 21.1*, Electronic Gas Measurement*

API *MPMS* Chapter 21.2, *Electronic Liquid Volume Measurement Using Positive Displacement and Turbine Meters*

API *MPMS* Chapter 22.1, *General Guidelines for Developing Testing Protocols for Devices Used in the Measurement of Hydrocarbon Fluids*

Provided by : www.spic.ir

--`,,```,,,,````-`-`,,`,,`,`,,`---

Copyright American Petroleum Institute

API *MPMS* Chapter 22.2, *Differential Pressure Flow Measurement Devices*

API *Vortex Shedding Flowmeter for Measurement of Hydrocarbon Fluids*

AGA B109.3 [24], *Rotary-Type Gas Displacement Meters*

AGA FOM, *Fluidic Oscillation Measurement for Natural Gas Applications*

AGA GMM-2, *Gas Measurement Manual—Part 2: Displacement Metering*

AGA GMM-3, *Gas Measurement Manual—Part 3: Gas Orifice Meters*

AGA GMM-4, *Gas Measurement Manual—Part 4: Gas Turbine Metering*

AGA REPORT 3-1, *Orifice Metering of Natural Gas and Other Related Hydrocarbon Fluids—Concentric, Square-edged Orifice Meters Part 1: General Equations and Uncertainty Guidelines*

AGA REPORT 3-2, *Orifice Metering Of Natural Gas and Other Related Hydrocarbon Fluids Part 2 Specification and Installation Requirements*

AGA REPORT 3-3, *Orifice Metering Of Natural Gas and Other Related Hydrocarbon Fluids Part 3 Natural Gas Applications*

AGA REPORT 3-4, *Orifice Metering Of Natural Gas and Other Related Hydrocarbon Fluids Part 4 Background, Development, Implementation Procedure, and Subroutine Documentation for Empirical Flange–Tapped Discharge Coefficient Equation*

AGA REPORT 7, *Measurement of Natural Gas by Turbine Meters*

AGA REPORT 9, *Measurement of Gas by Multipath Ultrasonic Meters*

AGA REPORT 11, *Measurement of Natural Gas by Coriolis Meters*

AGA TOMS, *The Theory and Operations of Meter Shop Sonic Nozzle Proving Systems for the Natural Gas Industry*

ASHRAE 28 [25], *Methods of Testing Flow Capacity of Refrigerant Capillary Tubes*

ASHRAE NY-08-030, *A Homogeneous Flow Model for Adiabatic Helical Capillary Tube*

ASME, *Fluid Meters*, Sixth Edition

ASME B1.20.1, *Pipe Threads, General Purpose (Inch)*

ASME B16.5, *Pipe Flanges and Flanged Fittings NPS 1/2 Through NPS 24*

ASME B16.9, *Factory-Made Wrought Buttwelding Fittings*

ASME B16.11, *Forged Fittings, Socket-Welding and Threaded*

ASME B31.4, *Pipeline Transportation Systems for Liquids and Slurrys*

[24] American Gas Association, 400 N. Capitol St., NW, Suite 450, Washington, DC 20001, www.aga.org.
[25] American Society of Heating, Refrigeration, and Air-Conditioning Engineers, 1791 Tullie Circle, N.E. Atlanta, GA 30329, www.ashrae.org.

Provided by : www.spic.ir

Copyright American Petroleum Institute

ASME B31.8, *Gas Transmission and Distribution Piping Systems*

ASME B36.10M, *Welded and Seamless Wrought Steel Pipe*

ASME B36.19M, *Stainless Steel Pipe*

ASME B40.2, *Diaphragm Seal (with ASME B40.100)*

ASME B40.5, *Snubbers (with ASME B40.100)*

ASME B40.6, *Pressure Limiters (with ASME B40.100)*

ASME B89.7.3.1, *Guidelines for Decision Rules: Considering Measurement Uncertainty in Determining Conformance to Specifications*

ASME MFC-1M, *Glossary of Terms Used in the Measurement of Fluid Flow in Pipes*

ASME MFC-2M, *Measurement Uncertainty for Fluid Flow in Closed Conduits*

ASME MFC-3Ma, *Measurement of Fluid Flow in Pipes Using Orifice, Nozzle, and Venturi Addendum*

ASME MFC-4M, *Measurement of Gas Flow by Turbine Meters*

ASME MFC-5.1, *Measurement of Liquid Flow in Closed Conduits Using Transit-Time Ultrasonic Flowmeters*

ASME MFC-5.3, *Measurement of Liquid Flow in Closed Conduits Using Doppler Ultrasonic Flowmeters*

ASME MFC-7M, *Measurement of Gas Flow by Means of Critical Flow Venturi Nozzles*

ASME MFC-9M, *Measurement of Liquid Flow in Closed Conduits by Weighing Methods*

ASME MFC-10M, *Method for Establishing Installation Effects on Flowmeters*

ASME MFC-11, *Measurement of Fluid Flow by Means of Coriolis Mass Flowmeters*

ASME MFC-12M, *Measurement of Fluid Flow in Closed Conduits Using Multiport Averaging Pitot Primary Elements*

ASME MFC-13M, *Measurement of Fluid Flow in Closed Conduits: Tracer Methods*

ASME MFC-16M, *Measurement of Liquid Flow in Closed Conduits With Electromagnetic Flowmeters*

ASME MFC-18M, *Measurement of Fluid Flow Using Variable Area Meters*

ASME MFC-22, *Measurement of Liquid by Turbine Flowmeters*

ASME MFC-26, *Measurement of Gas Flow by Bellmouth Inlet Flowmeters*

ASME PCC-1, *Guidelines for Pressure Boundary Bolted Flange Joint Assembly*

ASME PTC-19.1, *Test Uncertainty*

ASME PTC-19.3, *Temperature Measurement Instruments and Apparatus*

ASME PTC-19.5, *Flow Measurement*

Provided by : www.spic.ir

Copyright American Petroleum Institute

ASME PTC-19.22, *Data Acquisition Systems*

ASME V&V 20, *Standard for Verification and Validation in Computational Fluid Dynamics and Heat Transfer*

ASME Y14.38, *Abbreviations and Acronyms for Use on Drawings and Related Documents*

ASTM A105, *Standard Specification for Carbon Steel Forgings for Piping Applications*

ASTM A269, *Standard Specification for Seamless and Welded Austenitic Stainless Steel Tubing for General Service*

ASTM A632, *Standard Specification for Seamless and Welded Austenitic Stainless Steel Tubing (Small-Diameter) for General Service*

ASTM A789, *Standard Specification for Seamless and Welded Ferritic/Austenitic Stainless Steel Tubing for General Service*

ASTM A1047, *Standard Test Method for Pneumatic Leak Testing of Tubing*

ASTM B251, *Standard Specification for General Requirements for Wrought Seamless Copper and Copper-Alloy Tube*

ASTM B267, *Standard Specification for Wire for Use In Wire-Wound Resistors*

ASTM B743, *Standard Specification for Seamless Copper Tube in Coils*

ASTM B912, *Standard Specification for Passivation of Stainless Steels Using Electropolishing*

ASTM D3195, *Standard Practice for Rotameter Calibration*

ASTM D3648, *Standard Practices for the Measurement of Radioactivity*

ASTM D7282, *Standard Practice for Set-up, Calibration, and Quality Control of Instruments Used for Radioactivity Measurements*

ASTM E499, *Standard Practice for Leaks Using the Mass Spectrometer Leak Detector in the Detector Probe Mode*

ASTM E585, *Standard Specification for Compacted Mineral-Insulated, Metal-Sheathed, Base Metal Thermocouple Cable*

ASTM E1350, *Standard Guide for Testing Sheathed Thermocouples, Thermocouples Assemblies, and Connecting Wires Prior to, and After Installation or Service*

ASTM E2181, *Standard Specification for Compacted Mineral-Insulated, Metal-Sheathed, Noble Metal Thermocouples and Thermocouple Cable*

ASTM E2758, *Standard Guide for Selection and Use of Wideband, Low Temperature Infrared Thermometers*

ASTM F721, *Standard Specification for Gage Piping Assemblies*

ASTM F1172, *Standard Specification for Fuel Oil Meters of the Volumetric Positive Displacement Type*

ASTM F2044, *Standard Specification for Liquid Level Indicating Equipment, Electrical*

Provided by : www.spic.ir

Copyright American Petroleum Institute

ASTM F2045, *Standard Specification for Indicators, Sight, Liquid Level, Direct and Indirect Reading, Tubular Glass/ Plastic*

ASTM F2070, *Standard Specification for Transducers, Pressure and Differential, Pressure, Electrical and Fiber-Optic*

ASTM F2071, *Standard Specification for Switch, Position Proximity (Noncontact) or Limit (Mechanical Contact), Fiber-Optic*

ASTM G63, *Standard Guide for Evaluating Nonmetallic Materials for Oxygen Service*

ASTM G88, *Standard Guide for Designing Systems for Oxygen Service*

ASTM G94, *Standard Guide for Evaluating Metals for Oxygen Service*

ASTM MNL12, *Manual on the Use of Thermocouples in Temperature Measurement*

ASTM SI 10, *American National Standard for Use of the International System of Units (SI): The Modern Metric System*

BS 1041-4, *Temperature Measurement—Part 4: Guide to the Selection and Use of Thermocouples*

BS 3463, *Observation and Gauge Glasses for Pressure Vessels*

BS 5288, *Sealed radioactive sources*

BS 6174, *Specification for Differential Pressure Transmitters with Electrical Outputs*

BS 6447, *Specification for Absolute and Gauge Pressure Transmitters with Electrical Outputs*

BS 6739, *Code of Practice for Instrumentation in Process Control Systems: Installation, Design and Practice*

BS 7965 [26], *Guide to the selection, installation, operation and calibration of diagonal path transit time ultrasonic flowmeters for industrial gas applications*

BS 8452, *Use of clamp-on (externally mounted) ultrasonic flow metering techniques for fluid applications - Guide*

EI [27], *Guidelines for the management, design, installation and maintenance of small bore tubing systems*

EN 682 [28], *Elastomeric Seals—Materials Requirements for Seals Used in Pipes and Fittings Carrying Gas and Hydrocarbon Fluids*

EN 837-1, *Pressure Gauges Part 1: Bourdon Tube Pressure Gauges—Dimensions, Metrology, Requirements and Testing*

EN 837-2, *Pressure Gauges Part 2: Selection and Installation Recommendations for Pressure Gauges*

EN 837-3, *Pressure Gauges Part 3: Diaphragm and Capsule Pressure Gauges—Dimensions, Metrology, Requirements and Testing*

EN 13352, *Specification for the performance of automatic tank contents gauges*

[26] British Standards Institution, Chiswick High Road, London, W4 4AL, United Kingdom, www.bsi-global.com.
[27] Energy Institute, 61 New Cavendish Street, London, W1G 7AR, UK, www.energyinst.org.
[28] European Committee for Standardization, Avenue Marnix 17, B-1000, Brussels, Belgium, www.cen.eu.

Provided by : www.spic.ir

--`,,`,,`,`,,`,,`,`,,`,,`,

EN 13616, *Overfill prevention devices for static tanks for liquid petroleum fuels*

EN 50446, *Straight thermocouple assembly with metal or ceramic protection tube and accessories*

EN 60405, *Nuclear instrumentation—Constructional requirements and classification of radiometric gauges*

HPS N43.8, *Classification of Industrial Ionizing Radiation Gauging Devices*

IEC 61000-5-2, *Electromagnetic Compatibility (EMC)—Part 5: Installation and Mitigation Guidelines*

IEC 60381-2, *Analogue Signals for Process Control Systems Part 2: Direct Voltage Signals*

IEC 60476, *Nuclear Instrumentation—Electrical Measuring Systems and Instruments Utilizing Ionizing Radiation Sources—General Aspects*

IEC 60584-2, *Thermocouples Part 2: Tolerances*

IEC 60654-2, *Operating conditions for industrial-process measurement and control equipment. Part 2: Power*

IEC 60654-4, *Operating conditions for industrial-process measurement and control equipment. Part 4: Corrosive and erosive influences*

IEC 60692, *Nuclear instrumentation Density gauges utilizing ionizing radiation Definitions and test methods*

IEC 60770-2, *Transmitters for use in industrial-process control systems Part 2: Methods for inspection and routine testing*

IEC 60947-5-1, *Low-voltage switchgear and controlgear—Part 5-1: Control circuit devices and switching elements Electromechanical control circuit devices*

IEC 60947-5-2, *Low-voltage switchgear and controlgear—Part 5-2: Control circuit devices and switching elements Proximity switches*

IEC 60947-5-7, *Low-voltage switchgear and controlgear—Part 5-7: Control circuit devices and switching elements Requirements for proximity devices with analogue output*

IEC 60982, *Level Measuring Systems Utilizing Ionizing Radiation with Continuous or Switching Output*

IEC 61151, *Nuclear Instrumentation—Amplifiers and Preamplifiers Used with Detectors of Ionizing Radiation—Test Procedures*

IEC 61152, *Dimensions of Metal-Sheathed Thermometer Elements*

IEC 61158-3-1, *Industrial communication networks—Fieldbus specifications—Part 3-1: Data-link layer service definition—Type 1 elements*

IEC 61158-4-1, *Industrial communication networks—Fieldbus specifications—Part 4-1: Data-link layer protocol specification—Type 1 elements*

IEC 61298-3, *Process measurement and control devices General methods and procedures for evaluating performance Part 3: Tests for the effects of influence quantities*

IEC 61306, *Nuclear Instrumentation—Microprocessor Based Nuclear Radiation Measuring Devices*

Provided by : www.spic.ir

--`,,,`````,`,`,```,,`,`````,-`-`,,`,,`,`,,`---

Copyright American Petroleum Institute

IEC 61336, *Nuclear instrumentation—Thickness measurement systems utilizing ionizing radiation Definitions and test methods*

IEC 61452, *Nuclear Instrumentation—Measurement of Gamma-Ray Emission Rates of Radionuclides—Calibration and Use of Germanium Spectrometers*

IEC 61520, *Metal Thermowells for Thermometer Sensors - Functional Dimensions*

IEC 61784-1, *Industrial communication networks—Profiles—Part 1: Fieldbus profiles*

IEC 61987-1, *Industrial-process measurement and control Data structures and elements in process equipment catalogues Part 1: Measuring equipment with analogue and digital output*

IEC 61987-10, *Industrial-process measurement and control Data structures and elements in process equipment catalogues Part 10: Lists of properties (LOP's) for industrial-process measurement and control for electronic data exchange Fundamentals*

IEC 62372, *Nuclear instrumentation Housed scintillators Measurement methods of light output and intrinsic resolution*

IEC 62598, *Nuclear instrumentation Constructional requirements and classification of radiometric gauges*

IEC TS 62492-1, *Industrial process control devices—Radiation thermometers—Part 1: Technical data for radiation thermometers*

IEEE 398, *Standard Test Procedures for Photomultipliers for Scintillation Counting and Glossary for Scintillation Counting Field*

IEEE 622, *Recommended Practice for the Design and Installation of Electric Heat Tracing Systems for Nuclear Power Generating Stations*

IEEE 1050, *Guide for Instrumentation and Control Equipment Grounding in Generating Stations*

IGC 07/03/E [29], *Metering of Cryogenic Liquids*

IGC 13/12/E, *Oxygen Pipeline and Piping Systems*

IGC 33/06/E, *Cleaning of Equipment for Oxygen Service*

ISA RP2.1, *Manometer Tables*

ISA RP3.1, *Flowmeter Installations Seal and Condensate Chambers*

ISA RP3.2, *Flange Mounted Sharp Edged Orifice Plates for Flow Measurement*

ISA 5.06.01, *Functional Requirements Documentation for Control Software Applications*

ISA S7.1, *Pneumatic Control Circuit Pressure Test*

ISA RP12.4, *Pressurized Enclosures*

ISA RP16.4, *Nomenclature and Terminology for Extension—Type Variable Area Meters (Rotameters)*

[29] European Industrial Gases Association AISBL, Avenue des Arts 3-5, B-1210 Brussels, www.eiga.org.

Provided by : www.spic.ir

Copyright American Petroleum Institute

ISA RP16.5, *Installation, Operation, Maintenance Instructions for Glass Tube Variable Area Meters (Rotameters)*

ISA TR20.00.01, *Specification Forms for Process Measurement and Control Instruments Part 1: General Considerations*

ISA 37.1, *Electrical Transducer Nomenclature and Terminology*

ISA 50.00.01, *Compatibility of Analog Signals for Electronic Industrial Process Instruments*

ISA 51.1, *Process Instrumentation Terminology*

ISA RP60.2, *Control Center Design Guide and Terminology*

ISA TR77.42.02, *Fossil Fuel Power Plant Compensated Differential Pressure Based Drum Level Measurement*

ISA TR77.70.01, *Tracking and Reporting of Instrument and Control Data*

ISO 2715, *Liquid Hydrocarbons—Volumetric Measurement by Turbine Meter Systems*

ISO TR 3313, *Measurement of Fluid Flow in Closed Conduits—Guidelines on the Effects of Flow Pulsations on Flow-Measurement Instruments*

ISO 3354, *Measurement of clean water flow in closed conduits—Velocity-area method using current-meters in full conduits and under regular flow conditions*

ISO 4124, *Liquid Hydrocarbons—Dynamic Measurement—Statistical Control of Volumetric Metering Systems*

ISO 4185, *Measurement of Liquid Flow in Closed Conduits—Weighing Method*

ISO 4269, *Petroleum and Liquid Petroleum Products—Tank Calibration by Liquid Measurement—Incremental Method Using Volumetric Meters*

ISO 4359, *Flow measurement structures—Rectangular, trapezoidal and U-shaped flumes*

ISO 5167-1, *Measurement of Fluid Flow by Means of Pressure Differential Devices Inserted in Circular Cross-Section Conduits Running Full—Part 1: General Principles and Requirements*

ISO 5167-3, *Measurement of Fluid Flow by Means of Pressure Differential Devices Inserted in Circular-Cross Section Conduits Running Full—Part 3: Nozzles and Venturi Nozzles*

ISO 5167-4, *Measurement of Fluid Flow by Means of Pressure Differential Devices Inserted in Circular Cross-Section Conduits Running Full—Part 4: Venturi Tubes*

ISO 5168, *Measurement of fluid flow—Procedures for the evaluation of uncertainties*

ISO 6817, *Measurement of Conductive Liquid Flow in Closed Conduits—Method Using Electromagnetic Flowmeters*

ISO TR 7066-1, *Assessment of Uncertainty in Calibration and Use of Flow Measurement Devices—Part 1: Linear Calibration Relationships*

ISO 7066-2, *Assessment of Uncertainty in the Calibration and Use of Flow Measurement Devices—Part 2: Non-Linear Calibration Relationships*

Provided by : www.spic.ir

Copyright American Petroleum Institute

ISO 7278-1, *Liquid Hydrocarbons—Dynamic Measurement—Proving Systems for Volumetric Meters - Part 1: General Principles*

ISO 7278-2, *Liquid Hydrocarbons—Dynamic Measurement—Proving Systems for Volumetric Meters—Part 2: Pipe Provers*

ISO 7278-3, *Liquid Hydrocarbons—Dynamic Measurement—Proving Systems for Volumetric Meters—Part 3: Pulse Interpolation Techniques*

ISO 7278-4, *Liquid Hydrocarbons—Dynamic Measurement—Proving Systems for Volumetric Meters—Part 4: Guide for Operators of Pipe Provers*

ISO 8316, *Measurement of Liquid Flow in Closed Conduits—Method by Collection of the Liquid in a Volumetric Tank*

ISO 9104, *Measurement of Fluid Flow in Closed Conduits—Methods of Evaluating the Performance of Electromagnetic Flow - Meters for Liquids*

ISO 9200, *Crude Petroleum and Liquid Petroleum Products—Volumetric Metering of Viscous Hydrocarbons*

ISO 9300, *Measurement of gas flow by means of critical flow Venturi nozzles*

ISO TR 9824, *Hydrometry—Measurement of free surface flow in closed conduits*

ISO 11223-1, *Petroleum and Liquid Petroleum Products—Direct Static Measurements—Contents of Vertical Storage Tanks—Part 1: Mass Measurement by Hydrostatic Tank Gauging*

ISO TR 11583, *Measurement of wet gas flow by means of pressure differential devices inserted in circular cross-section conduits*

ISO 11631, *Measurement of Fluid Flow—Methods of Specifying Flowmeter Performance*

ISO 12185, *Crude Petroleum and Petroleum Products—Determination of Density—Oscillating U-Tube Method*

ISO TR 12764, *Measurement of Fluid Flow in Closed Conduits—Flowrate Measurement by Means of Vortex Shedding Flowmeters Inserted in Circular Cross-Section Conduits Running Full*

ISO TR 12765, *Measurement of Fluid Flow in Closed Conduits—Methods Using Transit-Time Ultrasonic Flowmeters*

ISO 13703, *Petroleum and Natural Gas Industries—Design and Installation of Piping Systems on Offshore Production Platforms*

ISO 14164, *Stationary Source Emissions—Determination of the Volume Flowrate of Gas Streams in Ducts*

ISO 14511, *Measurement of Fluid Flow in Closed Conduits—Thermal Mass Flowmeters*

ISO 14617-5, *Graphical Symbols for Diagrams—Part 5: Measurement and Control Devices*

ISO 14617-6, *Graphical Symbols for Diagrams—Part 6: Measurement and Control Functions*

ISO 15212-2, *Oscillation-Type Density Meters—Part 2: Process Instruments for Homogeneous Liquids*

ISO 17089-1, *Measurement of fluid flow in closed conduits—Ultrasonic meters for gas—Part 1: Meters for custody transfer and allocation measurement*

Provided by : www.spic.ir

Copyright American Petroleum Institute

ISO 18132-2, *Refrigerated light hydrocarbon fluids—General requirements for automatic level gauges—Part 2: Gauges in refrigerated-type shore tanks*

ISO GUIDE 98-1, *Uncertainty of measurement—Part 1: Introduction to the expression of uncertainty in measurement*

ISO GUIDE 98-3, *Uncertainty of measurement—Part 3: Guide to the expression of uncertainty in measurement*

MSS SP-130, *Bellows Seals for Instrument Valves*

MSS SP-132, *Compression Packing Systems for Instrument Valves*

NAMUR NE 43 [30], *Standardization of the Signal Level for the Failure Information of Digital Transmitters*

NAMUR NE 98, *Installation Requirements for Achieving EMC in Production Sites*

NAMUR NE 106, *Test Intervals of Safety Instrumented Systems*

NAMUR NE 130, *Proven-in-use Devices for Safety Instrumented Systems and simplified SIL Calculation*

NASA KSC-SPEC-Z-0008C [31], *Specification for Fabrication and Installation of Flared Tube Assemblies and Installation Fittings and Fitting Assemblies*

NEMA ICS 5 Appendix B, *Specifications for Proximity Switches*

NEMA ICS 6, *Industrial Control and Systems: Enclosures*

NFPA 51, *Standard for the Design and Installation of Oxygen Fuel Gas Systems for Welding, Cutting, and Allied Processes*

NFPA 496, *Standard for Purged and Pressurized Enclosures for Electrical Equipment*

NFPA T3.29.2 [32], *Method for verifying the fatigue and establishing the burst pressure ratings of the pressure containing envelope of a metal fluid power pressure switch*

NIST Handbook 44 [33], *General Tables of Units of Measurement*

OIML B3 [34], *OIML Certificate System for Measuring Instruments*

OIML D2, *Legal units of measurement*

OIML D8, *Measurement standards. Choice, recognition, use, conservation and documentation*

OIML D11, *General requirements for electronic measuring instruments*

OIML D20, *Initial and subsequent verification of measuring instruments and processes*

[30] NAMUR, Bayer Technology Services GmbH, OSS-Liaison, Building K 9, 51368 Leverkusen, Germany, www.namur.de.
[31] The National Aeronautics and Space Administration, NASA Headquarters, Suite 5K39, Washington, DC 20546-000, www.nasa.gov.
[32] National Fluid Power Association, 3333 North Mayfair Road, Suite 211, Milwaukee, Wisconsin 53222-3219, www.nfpa.com.
[33] National Institute of Standards and Technology, Deputy Director, Technology Services, National Institute of Standards and Technology, 100 Bureau Drive, Stop 2000, Gaithersburg, MD 20899-2000, www.nist.gov.
[34] International Organization of Legal Metrology, Bureau International de Métrologie Légale, 11, rue Turgot F-75009 PARIS – France, www.oiml.org.

Provided by : www.spic.ir

--`,,`````,`,`,```,,`,`````,-`-`,,`,,`,`,,`---
Copyright American Petroleum Institute

OIML D24, *Total radiation pyrometers*

OIML D25, *Vortex meters used in measuring systems for fluids*

OIML G1-100, *Evaluation of measurement data—Guide to the expression of uncertainty in measurement*

OIML G1-101, *Evaluation of measurement data—Supplement 1 to the Guide to the expression of uncertainty in measurement - Propagation of distributions using a Monte Carlo method*

OIML G1-102, *Evaluation of measurement data—Supplement 2 to the Guide to the expression of uncertainty in measurement—Extension to any number of output quantities*

OIML G1-104, *Evaluation of measurement data—An introduction to the Guide to the expression of uncertainty in measurement and related documents*

OIML G1-106, *Evaluation of measurement data—The role of measurement uncertainty in conformity assessment*

OIML G8, *Guide to practical temperature measurements*

OIML R34, *Accuracy classes of measuring instruments*

OIML R81, *Dynamic measuring devices and systems for cryogenic liquids*

OIML R84, *Platinum, copper, and nickel resistance thermometers for industrial and commercial use*

OIML R85-3, *Automatic level gauges for measuring the level of liquid in stationary storage tanks. Part 3: Report Format for type evaluation*

OIML R101, *Indicating and recording pressure gauges, vacuum gauges and pressure-vacuum gauges with elastic sensing elements (ordinary instruments)*

OIML R105, *Direct mass flow measuring systems for quantities of liquids*

OIML R109, *Pressure gauges and vacuum gauges with elastic sensing elements (standard instruments)*

OIML R117, *Dynamic measuring systems for liquids other than water. Part 1: Metrological and technical requirements*

OIML R119, *Pipe provers for testing of measuring systems for liquids other than water*

OIML R137-1, *Gas Meters Part 1: Requirements*

OIML R140, *Measuring systems for gaseous fuel*

PIP INEG1000, *Insulation Design Guide*

PIP INSR1000, *Installation of Flexible, Removable/Reusable Insulation Covers for Hot Insulation Service*

PIP PCCFL001, *Flow Measurement Design Criteria*

PIP PCCGN001, *General Instrumentation Design Basis*

PIP PCCGN002, *General Instrument Installation Criteria*

PIP PCCIA001, *Instrument Air Systems Design Criteria*

Provided by : www.spic.ir

--`,,,`````,,`,,`,,,`,,,,`,`````,,-`-`,,`,,`,`,,`---

Copyright American Petroleum Institute

PIP PCCLI001, *Level Measurement Design Criteria*

PIP PCCPR001, *Pressure Measurement Design Criteria*

PIP PCCTE001, *Temperature Measurement Design Criteria*

PIP PCCWE001, *Weigh Systems Design Criteria*

PIP PCEDO001, *Guidelines for Control Systems Documentation*

PIP PCEFL001, *Flow Measurement Guidelines*

PIP PCELI001, *Level Measurement Guidelines*

PIP PCETE001, *Temperature Measurement Guidelines*

PIP PCFGN000, *Instrument Pipe Support Fabrication Details*

PIP PCFTE100, *Thermowell Fabrication Details*

PIP PCIDP100, *Differential Pressure Transmitter Installation Details*

PIP PCIGN300, *General Instrument Accessory Details*

PIP PCIIA000, *Instrument Air Installation Details*

PIP PCIPR100, *Pressure Transmitter Installation Details*

PIP PCITE200, *RTD/Thermocouple Installation Details*

PIP PNF0200, *Vents, Drains, and Instrument Connection Details*

SAE AIR6202, *Test Cell Mass Fuel Flow Measurement Using Coriolis Flow Meters*

SAE AS5304, *Standard Specification for Turbine Flowmeters*

SAE HS-1086, *Metals and Alloys in the Unified Numbering System (UNS) 12th Edition*

SAMA RC 17-10 [35], *Bushing and Wells for Temperature Sensing Elements*

SAMA RC 21-4, *Temperature-Resistance Values for Resistance Thermometer Elements of Platinum, Nickel and Copper*

Provided by : www.spic.ir

[35] Measurement, Control & Automation Association, 2093 Harper's Mill Road, Williamsburg, VA 23185, www.measure.org.

--`,,`````,`,`,```,,`,`````,-`-`,,`,`,`,`---

Copyright American Petroleum Institute

Provided by : www.spic.ir

Copyright American Petroleum Institute

Provided by : www.spic.ir

Copyright American Petroleum Institute



AMERICAN PETROLEUM INSTITUTE

1220 L Street, NW
Washington, DC 20005-4070
USA

202-682-8000

Additional copies are available online at www.api.org/pubs

Phone Orders:	1-800-854-7179	(Toll-free in the U.S. and Canada)
	303-397-7956	(Local and International)
Fax Orders:	303-397-2740	

Information about API publications, programs and services is available on the web at www.api.org.

Product No. C55102

Provided by : www.spic.ir

Copyright American Petroleum Institute